8

Google Maps

Imagery ©2018 Google, Map data ©2018 Google 20 ft

HOOD INFORMATION - Job#2758549

HOOD NO.	TAG	MODEL	LENGTH	MAX. COOKING TEMP.	EXHAUST PLENUM TOTAL EXH. CFM	RISER(S) WIDTH	LENG.	HEIGHT	DIA.	CFM	VEL.	S.P.	TOTAL SUPPLY CFM	HOOD CONSTRUCTION	HOOD CONFIG. END TO END	ROW
1	H1 Prep	6024 ND-2-PSP-F	10' 0"	450 Deg.	1900	10"	18"	4"		1900	1520	-0.397"	1500	430 SS Where Exposed	ALONE	ALONE
2	H2 Display	5424 ND-2WI	4' 6"	600 Deg.	1450	10"	13"	4"		1450	1606	-0.455"	0	430 SS Where Exposed	ALONE	ALONE

HOOD INFORMATION

HOOD NO.	TAG	FILTER(S) TYPE	QTY.	HEIGHT	LENGTH	EFFICIENCY @ 7 MICRONS	LIGHT(S) QTY.	TYPE	WIRE GUARD	UTILITY CABINET(S) LOCATION	SIZE	FIRE SYSTEM TYPE	FIRE SYSTEM SIZE	ELECTRICAL MODEL #	SWITCHES QUANTITY	FIRE SYSTEM PIPING	HOOD HANGING WGHT
1	H1 Prep	SS Baffle with Handles	7	16"	16"	30%	3	LSS Series E26	NO	Wall Mnt	12"x42"x24"	Ansul R102	3.0	DCV-1111	1 Light 1 Fan	YES	546 LBS
2	H2 Display	SS Baffle with Handles	3	20"	16"	30%	2	Screw In Halogen	NO	Wall Mnt	12"x42"x24"	Ansul R102	3.0	DCV-1011	1 Light 1 Fan	YES	273 LBS

HOOD OPTIONS

HOOD NO.	TAG	OPTION
1	H1 Prep	FIELD WRAPPER 18.00" High Front, Left, Right
		BACKSPLASH 78.00" High X 120.00" Long 430 SS Vertical
		BACKSPLASH 120.00" High X 18.00" Long 430 SS Vertical
		BALANCE DAMPERS
2	H2 Display	FIELD WRAPPER 18.00" High Front, Left, Right, Back
		FINISHED BACK- ISL/REV INSTALL 54.00" Long

PERFORATED SUPPLY PLENUM(S)

HOOD NO.	TAG	POS.	LENGTH	WIDTH	HEIGHT	TYPE	RISER(S) WIDTH	LENG.	DIA.	CFM	S.P.
1	H1 Prep	Front	120"	14"	6"	MUA	12"	24"		750	0.212"
						MUA	12"	24"		750	0.212"

SEE PAGES 6&7 For ROOF EQUIPMENT

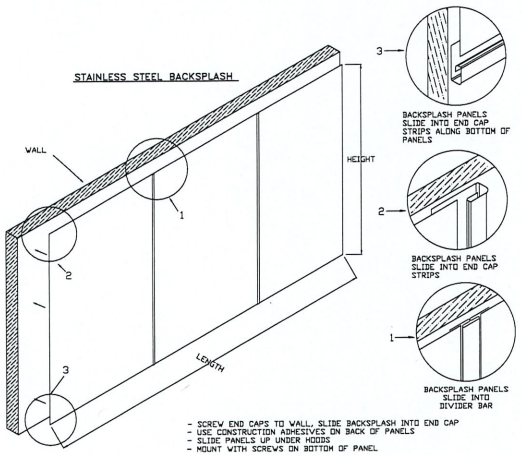

- SCREW END CAPS TO WALL, SLIDE BACKSPLASH INTO END CAP
- USE CONSTRUCTION ADHESIVES ON BACK OF PANELS
- SLIDE PANELS UP UNDER HOODS
- MOUNT WITH SCREWS ON BOTTOM OF PANEL

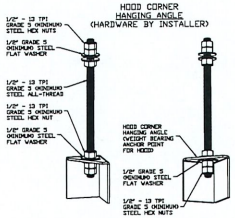

ASSEMBLY INSTRUCTIONS

HANGING ANGLE MUST BE SUPPORTED WITH 1/2" - 13 TPI GRADE 5 (MINIMUM) ALL-THREAD. SANDWICH HANGING ANGLES AND CEILING ANCHOR POINTS WITH 1/2" GRADE 5 (MINIMUM) STEEL FLAT WASHERS AND 1/2" - 13 TPI GRADE 5 (MINIMUM) HEX NUTS AS SHOWN. MUST USE DOUBLED HEX NUT CONFIGURATION BENEATH HOOD HANGING ANGLES AND ABOVE CEILING ANCHORS. MAINTAIN 1/4" OF EXPOSED THREADS BENEATH BOTTOM HEX NUT. TORQUE ALL HEX NUTS TO 57 FT-LBS.

REVISIONS

DESCRIPTION	DATE

CAPTIVEAIRE
WISCONSIN OFFICE
www.captiveaire.com
609 Bridge Street, Grafton, WI, 53024 PHONE: (262) 241-9210 FAX: (919) 227-5945 EMAIL: mg78@captiveaire.com

Glorioso's 2017a
1018 E. Brady St,
MILWAUKEE, WI, 53202

DATE: 1/5/2018

DWG.#: 2758549

DRAWN BY: JFW

SCALE: 3/4" = 1'-0"

MASTER DRAWING

SHEET NO. 1

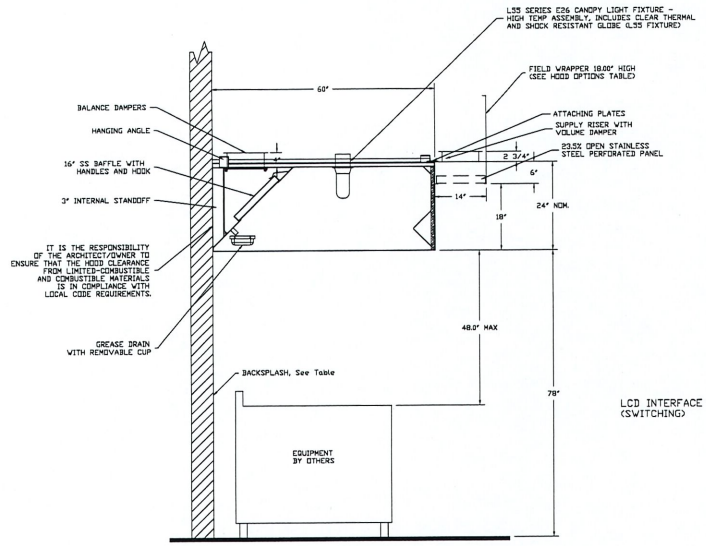

SECTION VIEW - MODEL 6024ND-2-PSP-F
HOOD - #1 (H1 Prep)

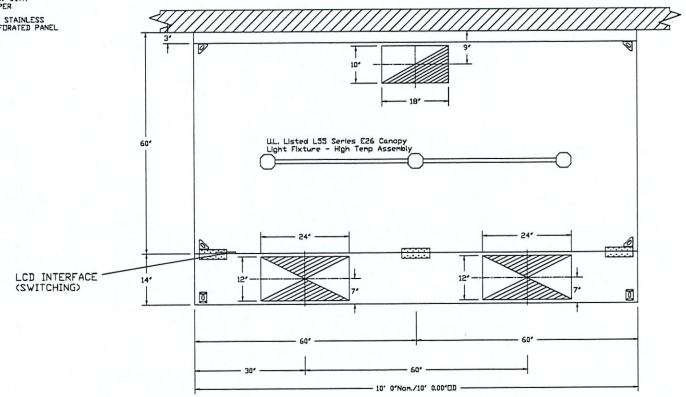

PLAN VIEW - Hood #1 (H1 Prep)
10' 0.00" LONG 6024ND-2-PSP-F

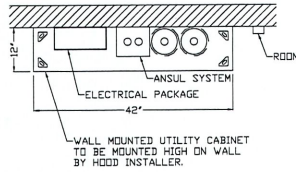

ELECTRICIAN NOTE:
ELECTRICIAN TO PROVIDE AND INSTALL ALL CONNECTIONS AND INTERCONNECTIONS AS REQUIRED BETWEEN HOOD ELECTRICAL PACKAGE AND HOOD, FANS, ANSUL SYSTEM, AND BREAKER PANEL. SEE WIRING DIAGRAM FOR DETAILS.

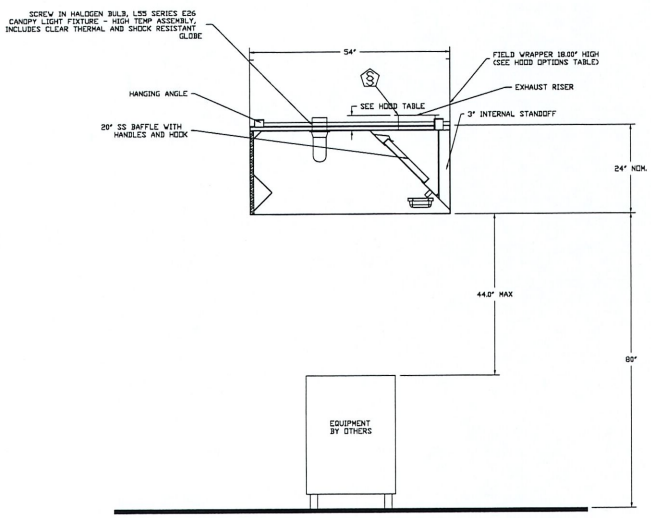

SECTION VIEW - MODEL 5424ND-2WI
HOOD - #2 (H2 Display)

PLAN VIEW - Hood #2 (H2 Display)
4' 6.00" LONG 5424ND-2WI

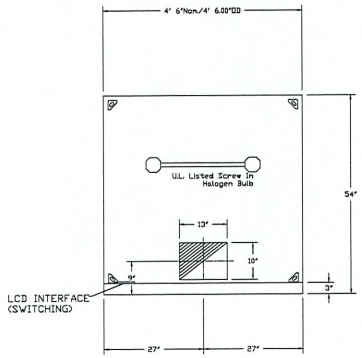

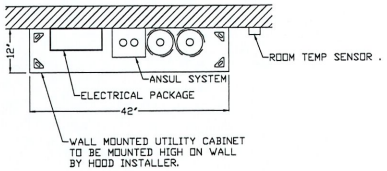

ELECTRICIAN NOTE:
ELECTRICIAN TO PROVIDE AND INSTALL ALL CONNECTIONS AND INTERCONNECTIONS AS REQUIRED BETWEEN HOOD ELECTRICAL PACKAGE AND HOOD, FANS, ANSUL SYSTEM, AND BREAKER PANEL. SEE WIRING DIAGRAM FOR DETAILS.

REVISIONS

DESCRIPTION	DATE:

CAPTIVEAIRE
WISCONSIN OFFICE
www.captiveaire.com
609 Bridge Street, Grafton, WI. 53024 PHONE: (262) 241-9210 FAX: (919) 227-5945 EMAIL: reg76@captiveaire.com

Glorioso's 2017a
1018 E. Brady St,
MILWAUKEE, WI, 53202

DATE: 1/5/2018

DWG.#: 2758549

DRAWN BY: JFW

SCALE: 3/4" = 1'-0"

MASTER DRAWING

SHEET NO. 2

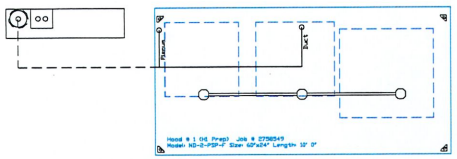

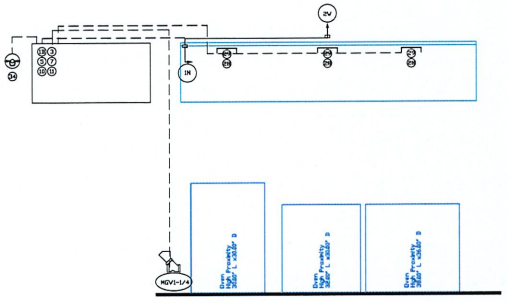

NOTES
- FIELD PIPE DROPS AS SHOWN
- SLEEVING, ELBOWS, TEES, AND NOZZLES SUPPLIED BY CAS
- RELOCATE NOZZLES IF FLOW PATTERN IS BLOCKED BY SHELVING, SALAMANDERS, ETC
- MAXIMUM 9 ELBOWS IN SUPPLY LINE.
- MINIMUM 72 INCHES OF AGENT LINE FROM TANK TO FIRST NOZZLE.
- IF APPLICABLE, PRE-PIPED CHARBROILER DROPS ARE SHIPPED LOOSE
- FACTORY PIPING EXTENDS A MAXIMUM OF 6" ABOVE THE TOP OF THE HOOD.

- APPLIANCE DIMENSIONS LISTED REPRESENT THE COOKING SURFACE SIZE, NOT THE OVERALL APPLIANCE SIZE.

- THIS FIRE SYSTEM COMPLIES WITH UL 300 REQUIREMENTS

Job #: 2758549
Job Name: Glorioso's 2018
Drawn By:
System Size: ANSUL-30-WC Total FP required: 3
Hood # 1: 10' 0.00" Long x 60" Wide x 24" High
Riser # 1 Size: 10" x 10"
Hood # 1 Metal Blow-Off Caps included.

LEGEND – FIRE CABINET ANSUL SYSTEM

1A	1.5 GALLON TANK
1B	3 GALLON TANK
2	OEM AUTOMAN RELEASE
3	OEM REGULATED RELEASE
4	OEM REGULATED ACTUATOR
5	ANSULEX LIQUID AGENT (3 GAL.)
6	ANSULEX LIQUID AGENT (1.5 GAL.)
7	CARTRIDGE (101-20)
8	CARTRIDGE (101-10)
9	CARTRIDGE (101-30)
9A	CARTRIDGE (LT-A-101-30)
9B	DOUBLE TANK CARTRIDGE
10	TEST LINK
11	DOUBLE MICROSWITCH
12	HOSE ASSEMBLY
1100	DUCT NOZZLE (430913)
2V	DUCT NOZZLE (419337)
1V	NOZZLE ASSEMBLY (419336)
1F	NOZZLE ASSEMBLY (419333)
1N	NOZZLE ASSEMBLY (419335)
1/2N	NOZZLE ASSEMBLY (419334)
3N	NOZZLE ASSEMBLY (419338)
245	NOZZLE ASSEMBLY (419340)
230	NOZZLE ASSEMBLY (419339)
2120	NOZZLE ASSEMBLY (419343)
290	NOZZLE ASSEMBLY (419342)
260	NOZZLE ASSEMBLY (419341)
28	DETECTOR BRACKET
29	LOW TEMP FUSIBLE LINK
30	HIGH TEMP FUSIBLE LINK
MGV	MECHANICAL GAS VALVE
EGV	ELECTRICAL GAS VALVE
34	REMOTE MANUAL PULL STATION
S	SWIVEL ADAPTOR

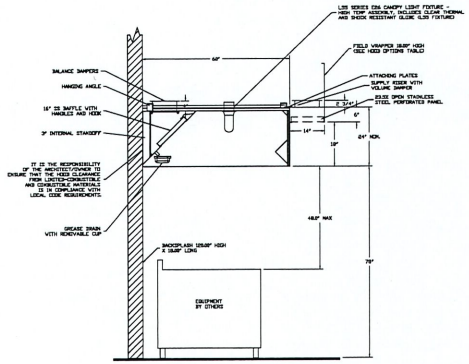

SECTION VIEW – MODEL 6024ND-2-PSP-F
HOOD – #1

DUCT NOZZLE AND
PLENUM SPRAY BAR LOCATION

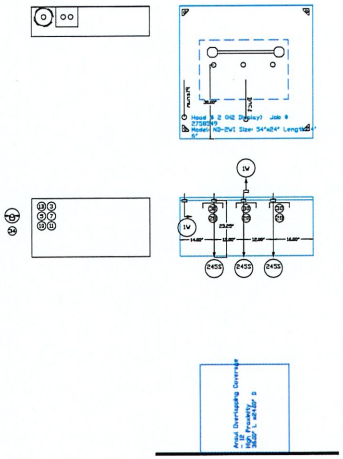

NOTES
- FIELD PIPE DROPS AS SHOWN
  SLEEVING, ELBOWS, TEES, AND NOZZLES SUPPLIED BY CAS
- RELOCATE NOZZLES IF FLOW PATTERN IS BLOCKED BY SHELVING, SALAMANDERS, ETC
- MAXIMUM 9 ELBOWS IN SUPPLY LINE.
- MINIMUM 72 INCHES OF AGENT LINE FROM TANK TO FIRST NOZZLE.
- IF APPLICABLE, PRE-PIPED CHARBROILER DROPS ARE SHIPPED LOOSE
- FACTORY PIPING EXTENDS A MAXIMUM OF 6" ABOVE THE TOP OF THE HOOD.

- APPLIANCE DIMENSIONS LISTED REPRESENT THE COOKING SURFACE SIZE, NOT THE OVERALL APPLIANCE SIZE.

- THIS FIRE SYSTEM COMPLIES WITH UL 300 REQUIREMENTS

Job #: 2758549
Job Name: Glorioso's 2017a
Drawn By:
System Size: ANSUL-30-WC Total FP required: 8
Hood # 2: 4' 6.00" Long x 54" Wide x 24" High
Riser # 1 Size: 10" x 10"
Hood # 2 Metal Blow-Off Caps included.

LEGEND – FIRE CABINET ANSUL SYSTEM

1A	1.5 GALLON TANK
1B	3 GALLON TANK
2	OEM AUTOMAN RELEASE
3	OEM REGULATED RELEASE
4	OEM REGULATED ACTUATOR
5	ANSULEX LIQUID AGENT (3 GAL.)
6	ANSULEX LIQUID AGENT (1.5 GAL.)
7	CARTRIDGE (101-20)
8	CARTRIDGE (101-10)
9	CARTRIDGE (101-30)
9A	CARTRIDGE (LT-A-101-30)
9B	DOUBLE TANK CARTRIDGE
10	TEST LINK
11	DOUBLE MICROSWITCH
12	HOSE ASSEMBLY
1100	DUCT NOZZLE (430913)
2V	DUCT NOZZLE (419337)
1V	NOZZLE ASSEMBLY (419336)
1F	NOZZLE ASSEMBLY (419333)
1N	NOZZLE ASSEMBLY (419335)
1/2N	NOZZLE ASSEMBLY (419334)
3N	NOZZLE ASSEMBLY (419338)
245	NOZZLE ASSEMBLY (419340)
230	NOZZLE ASSEMBLY (419339)
2120	NOZZLE ASSEMBLY (419343)
290	NOZZLE ASSEMBLY (419342)
260	NOZZLE ASSEMBLY (419341)
28	DETECTOR BRACKET
29	LOW TEMP FUSIBLE LINK
30	HIGH TEMP FUSIBLE LINK
MGV	MECHANICAL GAS VALVE
EGV	ELECTRICAL GAS VALVE
34	REMOTE MANUAL PULL STATION
S	SWIVEL ADAPTOR

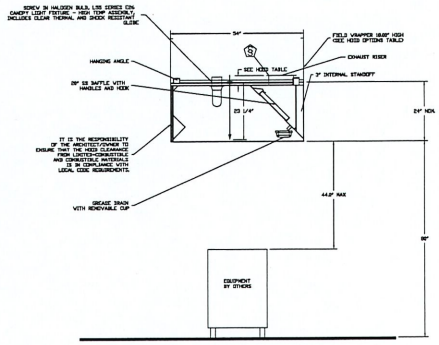

SECTION VIEW – MODEL 5424ND-2W1
HOOD – #2

DUCT NOZZLE AND
PLENUM SPRAY BAR LOCATION

REVISIONS

DESCRIPTION	DATE

CAPTIVEAIRE
WISCONSIN OFFICE
www.captiveaire.com
609 Bridge Street, Grafton, WI, 53024 PHONE: (262) 241-9210 FAX: (919) 227-5945 EMAIL: mg78@capitiveaire.com

Glorioso's 2017a
1018 E. Brady St,
MILWAUKEE, WI, 53202

DATE: 1/5/2018

DWG.#: 2758549

DRAWN BY: JFW

SCALE: 1/2" = 1'-0"

MASTER DRAWING

SHEET NO. 3

Fire System Information – Job#2758549

FIRE SYSTEM NO.	Tag	TYPE	SIZE	FLOW POINTS	INSTALLATION	
					SYSTEM	LOCATION ON HOOD
1	FS-1	Ansul R102	3.0	6	Wall Utility Cabinet Left	N/A
2	FS-2	Ansul R102	3.0	8	Wall Utility Cabinet Left	N/A

TYPICAL ANSUL R102 SYSTEM LAYOUT WITH WALL MOUNTED UTILITY CABINET

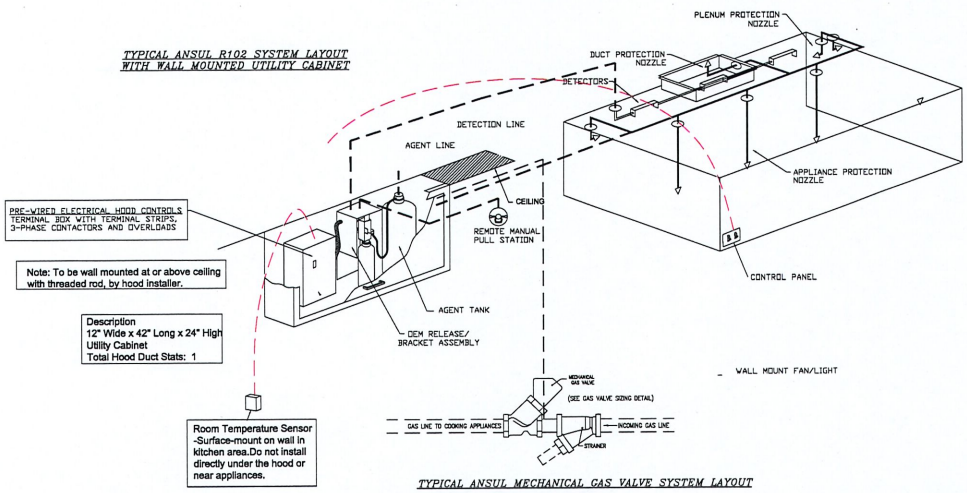

TYPICAL ANSUL MECHANICAL GAS VALVE SYSTEM LAYOUT

MECHANICAL GAS VALVE FURNISHED BY FIRE SYSTEM DISTRIBUTOR. VALVE GIVEN TO CUSTOMERS MECHANICAL CONTRACTOR FOR INSTALLATION PRIOR TO FINAL FIELD HOOK UP OF SYSTEM. (INSTALLATION OF VALVE - CUSTOMER EXPENSE)

ANSUL PULL STATION DETAIL

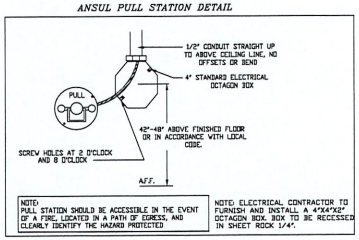

CAPTIVE-AIRE SYSTEMS ASSUMES RESPONSIBILITY FOR THE PRE-PIPING OF THE FIRE SYSTEM BASED UPON THE COOKING EQUIPMENT INFORMATION WE RECEIVE. IT IS THE CUSTOMER'S RESPONSIBILITY TO VERIFY THE COOKING EQUIPMENT LOCATION, SPACING, AND COOKING SURFACE DIMENSIONS. THE CUSTOMER IS RESPONSIBLE FOR ADDITIONAL CHARGES AS A RESULT OF COOKING EQUIPMENT LAYOUT CHANGES AFTER THE RELEASE OF AN ORDER, UNION LABOR CHARGES, OR ADDITIONAL TRIPS MADE BY THE FIRE SYSTEM DISTRIBUTOR CAUSED BY JOBSITE DELAYS.

PER NFPA 96 & NFPA 17A, IF BUILDING DOES NOT HAVE AN ALARM SYSTEM, AN AUDIBLE OR VISUAL INDICATOR NEEDS TO BE PROVIDED. THIS IS BY OTHERS

WITH FIRE SYSTEM COCKED
C & NC = CIRCUIT
C & NO = OPEN

WITH FIRE SYSTEM FIRED
C & NC = OPEN
C & NO = CIRCUIT

MICROSWITCH FURNISHED. SHUNT TRIP BREAKERS AND ALL OTHER ELECTRIC SHUTDOWNS & WIRING BY OTHERS

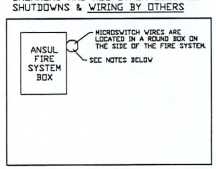

REVISIONS

DESCRIPTION	DATE

CAPTIVE-AIRE
WISCONSIN OFFICE
609 Bridge Street, Grafton, WI, 53024 PHONE: (262) 241-9210 FAX: (919) 227-5945 EMAIL: reg76@capitiveaire.com
www.captiveaire.com

Glorioso's 2017a
1018 E. Brady St,
MILWAUKEE, WI, 53202

DATE: 1/5/2018

DWG.#: 2758549

DRAWN BY: JFW

SCALE: 3/4" = 1'-0"

MASTER DRAWING

SHEET NO. 4

CONDENSER DETAILS

FAN UNIT NO.	TAG	FAN UNIT MODEL #	CONDENSER NO.	TONNAGE	VOLTAGE	PHASE	FREQUENCY	MCA	RLA	MAX. FUSE SIZE	MIN. WIRE SIZE	SEER
3	MUA-1	A3-D.750-G18-MPU	1	5	208-230	3 PHASE	60 Hz	21.4 Amps	17.4 Amps	30 Amps	12 AWG	14
			2	5	208-230	3 PHASE	60 Hz	21.4 Amps	17.4 Amps	30 Amps	12 AWG	14

MUA FAN INFORMATION – Job#2758549

FAN UNIT NO.	TAG	FAN UNIT MODEL #	BLOWER	HOUSING	DESIGN CFM		ESP.	RPM	H.P.	B.H.P.	ø	VOLT	FLA	COOLING COIL ENTERING DB TEMP.	COOLING COIL ENTERING WB TEMP.	COOLING COIL LEAVING DB TEMP.	COOLING COIL LEAVING WB TEMP.	COOLING COIL TOTAL CAPACITY	COOLING COIL SENSIBLE CAPACITY	COOLING COIL LATENT CAPACITY	WEIGHT (LBS.)	SONES	BURNER EFFICIENCY(%)
					MIN	MAX																	
3	MUA-1	A3-D.750-G18-MPU	G18-PB	A3-D.750	3500	5000	0.600	754	3.000	2.3050	3	208	9.5	88.0°F	75.0°F	76.8°F	69.7°F	106.6 MBH	60.5 MBH	46.1 MBH	1923	12.6	92

GAS FIRED MAKE-UP AIR UNIT(S)

FAN UNIT NO.	TAG	INPUT BTUs	OUTPUT BTUs	TEMP. RISE	REQUIRED INPUT GAS PRESSURE	GAS TYPE
3	MUA-1	428478	394200	73 deg F	7 in. w.c. - 14 in. w.c.	Natural

FAN OPTIONS

FAN UNIT NO.	TAG	OPTION (Qty. - Descr.)
1	EF1	1 - BI24 - 24" Discharge Extension.
		1 - BI - Discharge Orientation Vertical Upper Left - CW Inlet Side.
		1 - Utility Set Grease Cup
		1 - BI24 - Inlet Ring Used To Connect Non-Factory Duct.
2	EF2	1 - Grease Box
		1 - Wall Mount Construction For Fan
3	MUA-1	1 - AC Interlock Relay - 24VAC Coil
		1 - Motorized Backdraft Damper For A3-D Housing
		1 - Low Fire Start
		1 - Inlet Pressure Gauge, 0-35"
		1 - Manifold Pressure Gauge, -5 to 15" wc
		1 - 10 Ton 2 Circuit (5/5) Modular Packaged Cooling Option for Size 3 MUA (3,600 to 6,000 cfm), 208V/230V, 3 phase. Cooling Thermostat or Programmable Stat Required for Proper Operation.
		1 - Separate 120V Wiring Package (Required and used only for DCV or Prewire with VFD) - Three Phase Only
		1 - Cooling Thermostat and Relay w/RP Interlock (not req for evap)

FAN ACCESSORIES

FAN UNIT NO.	TAG	EXHAUST			SUPPLY			
		GREASE CUP	GRAVITY DAMPER	WALL MOUNT	SIDE DISCHARGE	GRAVITY DAMPER	MOTORIZED DAMPER	WALL MOUNT
1	EF1	YES						
2	EF2	YES						
3	MUA-1				YES		YES	

CURB ASSEMBLIES

NO.	ON FAN	WEIGHT	ITEM	SIZE
1	# 1	31 LBS	Curb	4.000"W x 60.000"L x 10.000"H
2	# 2	20 LBS	Curb	23.000"W x 23.000"L x 16.000"H Insulated Hinged
3	# 3	130 LBS	Curb	35.000"W x 126.000"L x 20.000"H Insulated

REVISIONS

	DESCRIPTION	DATE
1		
2		
3		
4		

CAPTIVEAIRE
WISCONSIN OFFICE
609 Bridge Street, Grafton, WI, 53024 PHONE: (262) 241-9210 FAX: (919) 227-5945 EMAIL: reg78@captiveaire.com
www.captiveaire.com

Glorioso's 2017a
1018 E. Brady St,
MILWAUKEE, WI, 53202

DATE: 1/5/2018

DWG.#: 2758549

DRAWN BY: JFW

SCALE: 3/4" = 1'-0"

MASTER DRAWING

SHEET NO. 5

FAN #1 USBI24DD-RM - EXHAUST FAN (EF1)

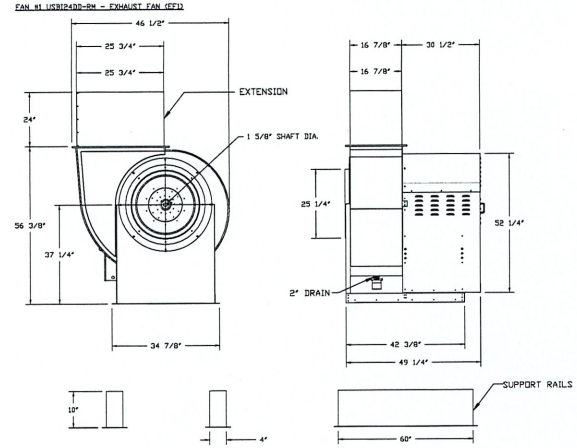

FEATURES:

- ROOF MOUNTED FANS
- RESTAURANT MODEL
- UL705
- UL762
- HIGH HEAT OPERATION DIRECT DRIVE 350°F (176°C)
- HIGH HEAT OPERATION BELT DRIVE 350°F (176°C)
- HEAT SLINGER
- GREASE CLASSIFICATION TESTING
- 2" DRAIN
- MOTOR WEATHER COVER
- FULLY SEALED SCROLL HOUSING
- SCROLL ACCESS DOOR
- FLANGE 1 1/4" - 11 THRU 20.
- FLANGE 2" - 24 THRU 36.

OPTIONS

BI24 - 24" DISCHARGE EXTENSION.
BI - DISCHARGE ORIENTATION VERTICAL UPPER LEFT - CW INLET SIDE.
UTILITY SET GREASE CUP
BI24 - INLET RING USED TO CONNECT NON-FACTORY DUCT.

NORMAL TEMPERATURE TEST DIRECT DRIVE
EXHAUST FAN MUST OPERATE CONTINUOUSLY WHILE EXHAUSTING AIR AT 350°F (176°C) UNTIL ALL FAN PARTS HAVE REACHED THERMAL EQUILIBRIUM, AND WITHOUT ANY DETERIORATING EFFECTS TO THE FAN WHICH WOULD CAUSE UNSAFE OPERATION.

Fan on roof

FAN #2 DUB5HFA - EXHAUST FAN (EF2)

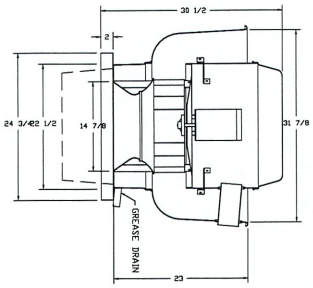

FEATURES:

- DIRECT DRIVE CONSTRUCTION (NO BELTS/PULLEYS)

- RESTAURANT MODEL
- UL705 AND UL762
- VARIABLE SPEED CONTROL
- INTERNAL WIRING
- WEATHERPROOF DISCONNECT
- THERMAL OVERLOAD PROTECTION (SINGLE PHASE)
- HIGH HEAT OPERATION 300°F (149°C)
- GREASE CLASSIFICATION TESTING

NORMAL TEMPERATURE TEST
EXHAUST FAN MUST OPERATE CONTINUOUSLY WHILE EXHAUSTING AIR AT 300°F (149°C) UNTIL ALL FAN PARTS HAVE REACHED THERMAL EQUILIBRIUM, AND WITHOUT ANY DETERIORATING EFFECTS TO THE FAN WHICH WOULD CAUSE UNSAFE OPERATION.

ABNORMAL FLARE-UP TEST
EXHAUST FAN MUST OPERATE CONTINUOUSLY WHILE EXHAUSTING BURNING GREASE VAPORS AT 600°F (316°C) FOR A PERIOD OF 15 MINUTES WITHOUT THE FAN BECOMING DAMAGED TO ANY EXTENT THAT COULD CAUSE AN UNSAFE CONDITION.

OPTIONS

GREASE BOX
WALL MOUNT CONSTRUCTION FOR FAN

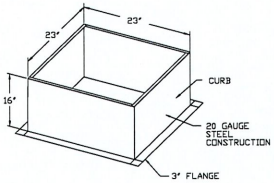

Wall Mount w/ Standard Curb SIDE VIEW

(24" WHEEL 2 HP MAXIMUM)

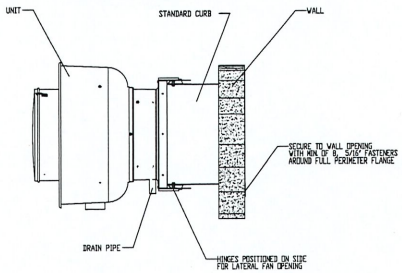

THROUGH WALL CURB INSTALLATION

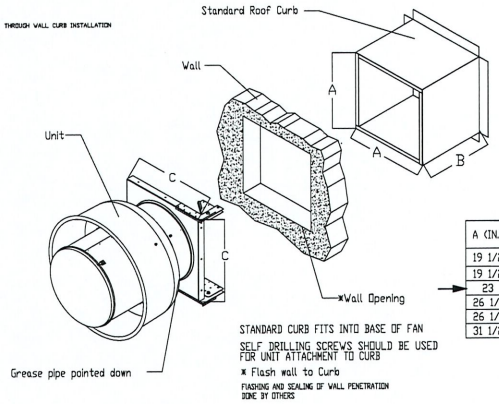

A (IN.)	B (IN.)	C (IN.)
19 1/2	22	21
19 1/2	18	21
23	16	24 3/4
26 1/6	16	28
26 1/2	20	28
31 1/2	20	33

STANDARD CURB FITS INTO BASE OF FAN

SELF DRILLING SCREWS SHOULD BE USED FOR UNIT ATTACHMENT TO CURB

* Flash wall to Curb

FLASHING AND SEALING OF WALL PENETRATION DONE BY OTHERS

REVISIONS

DESCRIPTION	DATE

CAPTIVEAIRE
WISCONSIN OFFICE
www.captiveaire.com
609 Bridge Street, Grafton, WI, 53024 PHONE: (262) 241-9210 FAX: (919) 227-6945 EMAIL: mg76@captiveaire.com

Glorioso's 2017a
1018 E. Brady St,
MILWAUKEE, WI, 53202

DATE: 1/5/2018

DWG.#: 2758549

DRAWN BY: JFW

SCALE: 3/4" = 1'-0"

MASTER DRAWING

SHEET NO. 6

FAN #3 A3-D.750-G18-MPU - HEATER (MUA-1)
1. DIRECT GAS FIRED HEATED MAKE UP AIR UNIT WITH 18" BLOWER AND 18" BURNER.
2. INTAKE HOOD WITH EZ FILTERS
3. SIDE DISCHARGE - AIR FLOW RIGHT -> LEFT
4. COOLING INTERLOCK RELAY. 24VAC COIL. 120V CONTACTS. LOCKS OUT BURNER CIRCUIT WHEN AC IS ENERGIZED.
5. MOTORIZED BACK DRAFT DAMPER 30" X 30" FOR SIZE 3 STANDARD & MODULAR HEATER UNITS W/EXTENDED SHAFT, STANDARD GALVANIZED CONSTRUCTION, 3/4" REAR FLANGE. NF3UP-S ACTUATOR INCLUDED
6. LOW FIRE START. ALLOWS THE BURNER CIRCUIT TO ENERGIZE WHEN THE MODULATION CONTROL IS IN A LOW FIRE POSITION.
7. GAS PRESSURE GAUGE, 0-35", 2.5" DIAMETER, 1/4" THREAD SIZE
8. GAS PRESSURE GAUGE, -5 TO +15 INCHES W.C. 2.5" DIAMETER, 1/4" THREAD SIZE
9. 10 TON, DUAL CIRCUIT (5/5) MODULAR PACKAGED COOLING OPTION FOR SIZE 3 MODULAR PACKAGED UNIT. INCLUDES CONDENSER, DX COIL, FILTER/DRYER KIT, THERMAL EXPANSION VALVE, R410A REFRIGERANT, AND REFRIGERANT PIPING. (3,600 TO 6,000 CFM) NOT BUILT WITH OPPOSITE SIDE CONTROLS OR OPPOSITE AIRFLOW DIRECTION. CONDENSERS REQUIRE SEPARATE 208V, 3 PHASE POWER SUPPLY. COIL = 3CJ0662M
10. SEPARATE 120VAC WIRING PACKAGE FOR MAKE-UP AIR UNITS. OPTION MUST BE SELECTED WHEN MOUNTING VFD IN PREWIRE PANEL OR WITH DCV PACKAGE. PROVIDES SEPARATE 120VAC INPUT TO SUPPLY FAN. THIS 120V SIGNAL MUST BE RUN BY ELECTRICIAN FROM DCV TO MUA SWITCH.
11. COOLING THERMOSTAT AND RELAY MOUNTED IN FAN WITH REMOTE PANEL INTERLOCK - SET POINT FOR THERMOSTAT SHOULD BE 85°F.

NOTE: SUPPLY DUCT MUST BE INSTALLED TO MEET SMACNA STANDARDS. A MINIMUM STRAIGHT DUCT LENGTH EQUAL TO THREE TIMES THE SUPPLY DUCT EQUIVALENT DIAMETER MUST BE MAINTAINED DOWNSTREAM OF UNIT DISCHARGE UNLESS OTHERWISE SPECIFIED. DO NOT RELY ON UNIT TO SUPPORT DUCT IN ANY WAY.

NEW MUA

SUPPLY SIDE HEATER INFORMATION:

WINTER TEMPERATURE = -10°F. TEMP. RISE = 73°F.
BTUs CALCULATED OFF STANDARD AIR DENSITY
OUTPUT BTUs AT ALTITUDE OF 0.0 Ft. = 394200
INPUT BTUs AT ALTITUDE OF 0.0 Ft. = 426478

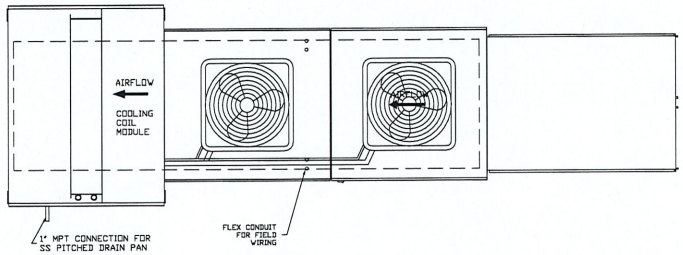

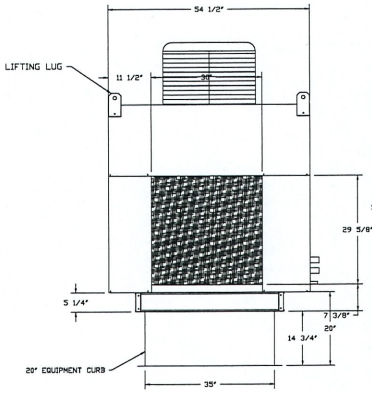

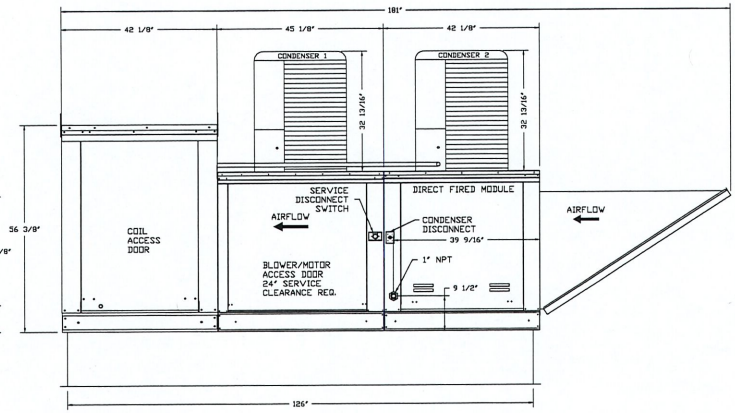

Typical Drain Trap Install

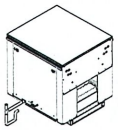

Recommended Cooling Coil Drain Trap Configuration

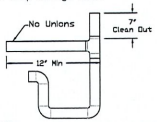

Notes:
1) 1" diameter PVC Pipe only
2) Use only low profile couplings
3) Add clean out as shown

REVISIONS

DESCRIPTION	DATE:

CAPTIVEAIRE
WISCONSIN OFFICE
www.captiveaire.com
609 Bridge Street, Grafton, WI. 53024 PHONE: (262) 241-9210 FAX: (919) 227-5945 EMAIL: reg76@captiveaire.com

Glorioso's 2017a
1018 E. Brady St,
MILWAUKEE, WI, 53202

DATE: 1/5/2018
DWG.#: 2758549
DRAWN BY: JFW
SCALE: 3/4" = 1'-0"
MASTER DRAWING
SHEET NO. 7

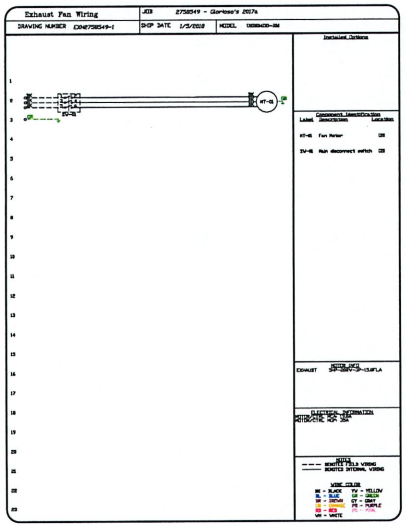

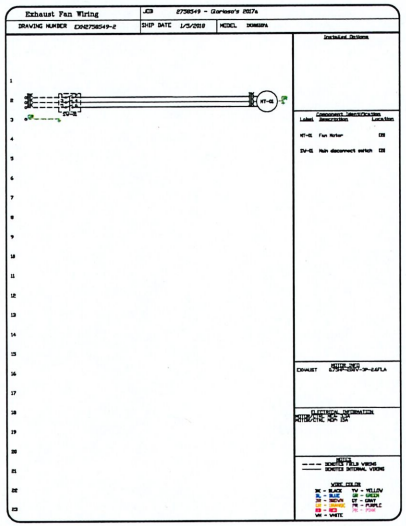

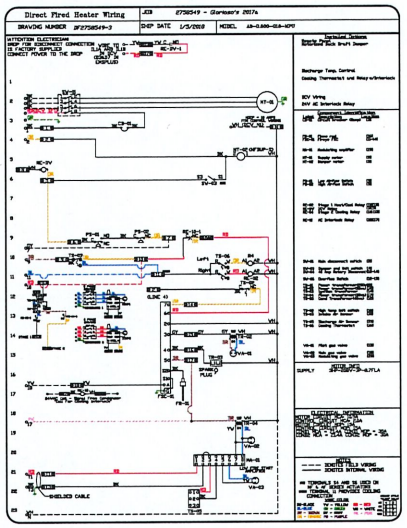

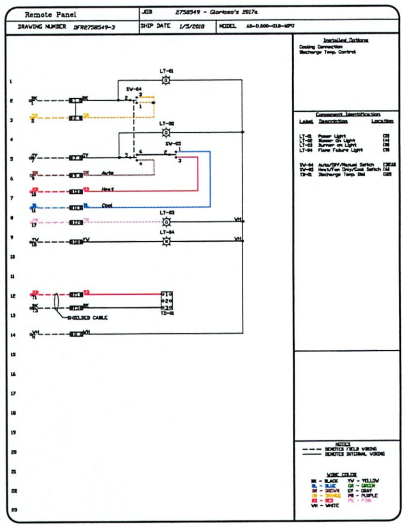

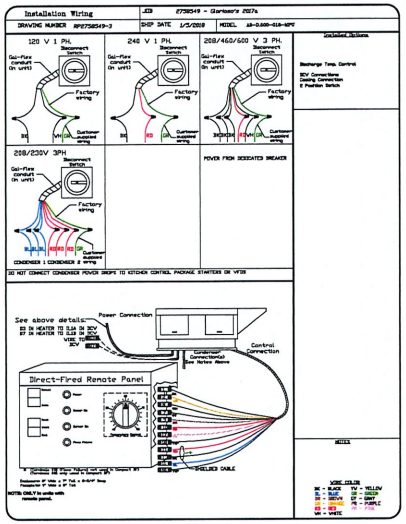

REVISIONS

DESCRIPTION	DATE

CAPTIVEAIRE

WISCONSIN OFFICE

609 Bridge Street, Grafton, WI, 53024 PHONE: (262) 241-9210 FAX: (819) 227-5945 EMAIL: mg76@captiveaire.com

www.captiveaire.com

Glorioso's 2017a
1018 E. Brady St,
MILWAUKEE, WI, 53202

DATE: 1/5/2018

DWG.#: 2758549

DRAWN BY: JFW

SCALE: 3/4" = 1'-0"

MASTER DRAWING

SHEET NO. 8

ELECTRICAL PACKAGES – Job#2758549

NO.	TAG	PACKAGE #	LOCATION	SWITCHES		OPTION	FANS CONTROLLED				
				LOCATION	QUANTITY		FAN TAG	TYPE	?	H.P.	VOLT	FLA
1	ECP-1	DCV-1111	Wall Utility Cabinet Left	UI - Face Mount Left Side of Hood Hood # 1	1 Light 1 Fan	Smart Controls DCV	EF1	Exhaust	3	5.000	208	15.8
							MUA-1	Supply	3	3.000	208	8.7
2	ECP-2	DCV-1011	Wall Utility Cabinet Left	UI - Face Mount Left Side of Hood Hood # 2	1 Light 1 Fan	Smart Controls DCV	EF2	Exhaust	3	0.750	208	2.6

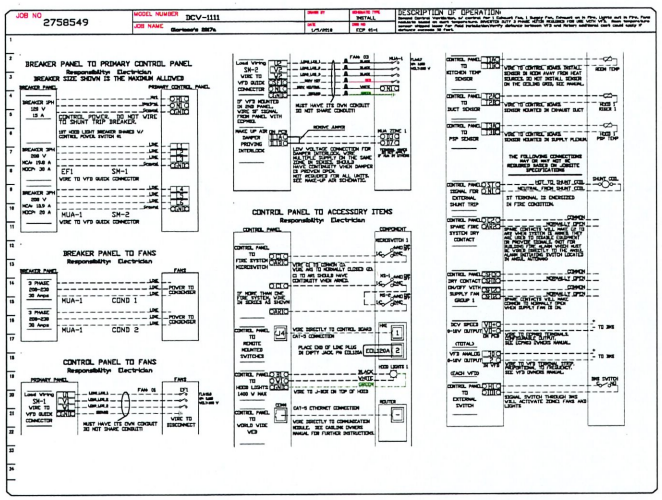

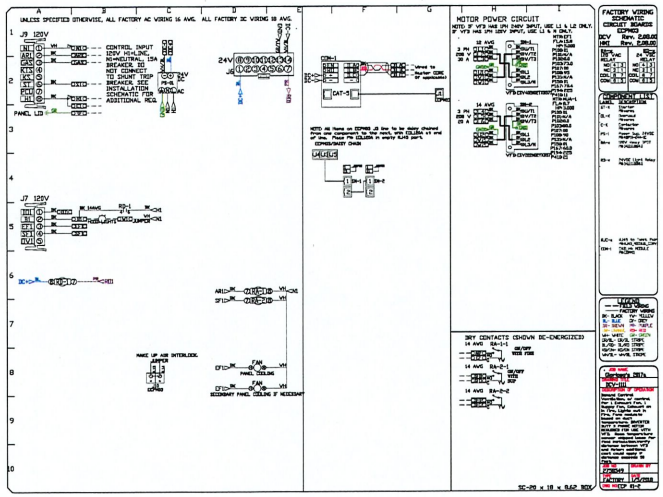

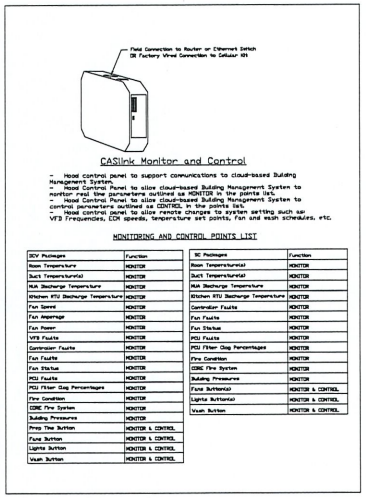

DCV Packages	Function
Room Temperature	MONITOR
Duct Temperature(s)	MONITOR
MUA Discharge Temperature	MONITOR
Kitchen RTU Discharge Temperature	MONITOR
Fan Speed	MONITOR
Fan Amperage	MONITOR
Fan Power	MONITOR
VFD Faults	MONITOR
Contrasion Faults	MONITOR
Fan Faults	MONITOR
Fan Status	MONITOR
PCU Faults	MONITOR
PCU Filter Clog Percentages	MONITOR
Fire Condition	MONITOR
CORE Fire System	MONITOR
Building Pressures	MONITOR
Prep Tbs Button	MONITOR & CONTROL
Fans Button	MONITOR & CONTROL
Lights Button	MONITOR & CONTROL
Wash Button	MONITOR & CONTROL

SC Packages	Function
Room Temperature(s)	MONITOR
Duct Temperature(s)	MONITOR
MUA Discharge Temperature	MONITOR
Kitchen RTU Discharge Temperature	MONITOR
Contrasion Faults	MONITOR
Fan Faults	MONITOR
Fan Status	MONITOR
PCU Faults	MONITOR
PCU Filter Clog Percentages	MONITOR
Fire Condition	MONITOR
CORE Fire System	MONITOR
Building Pressures	MONITOR
Prep Tbs Button	MONITOR & CONTROL
Fans Button	MONITOR & CONTROL
Lights Button	MONITOR & CONTROL
Wash Button	MONITOR & CONTROL

Description
12" Wide x 42" Long x 24" High
Utility Cabinet
Total Hood Duct Stats: 1

Note: To be wall mounted at or above ceiling with threaded rod, by hood installer.

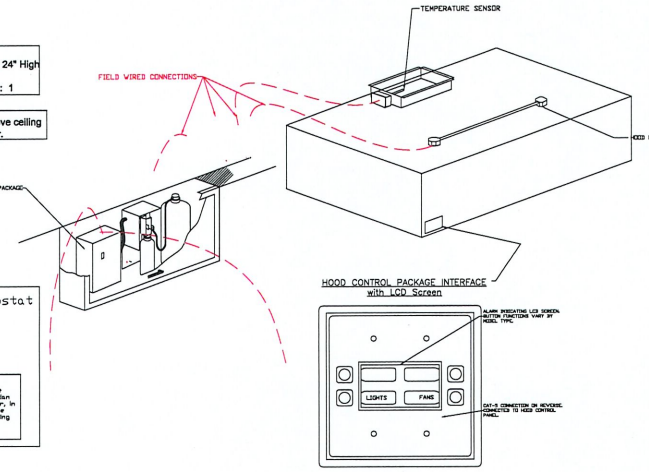

Room Override Thermostat

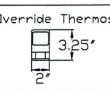

Provides room override based on temperature differential between the room and duct. Installed by electrician on a wall, 5'-6' off the finished floor, in the space but not directly under the hood or close to an appliance (including the electrical control box) so the reading is accurate for space.

DUCT THERMISTOR SENSOR INSTALLATION

NOTE: Thermistor has 2 wires that connect to control output

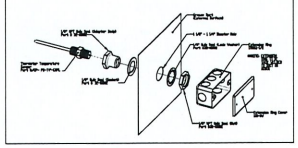

REVISIONS

DESCRIPTION	DATE

CAPTIVEAIRE
WISCONSIN OFFICE
www.captiveaire.com
609 Bridge Street, Grafton, WI, 53024 PHONE: (262) 241-9210 FAX: (919) 227-9345 EMAIL: mg78@captiveaire.com

Glorioso's 2017a
1018 E. Brady St,
MILWAUKEE, WI, 53202

DATE: 1/5/2018
DWG.#: 2758549
DRAWN BY: JFW
SCALE: 3/4" = 1'-0"
MASTER DRAWING
SHEET NO. 9

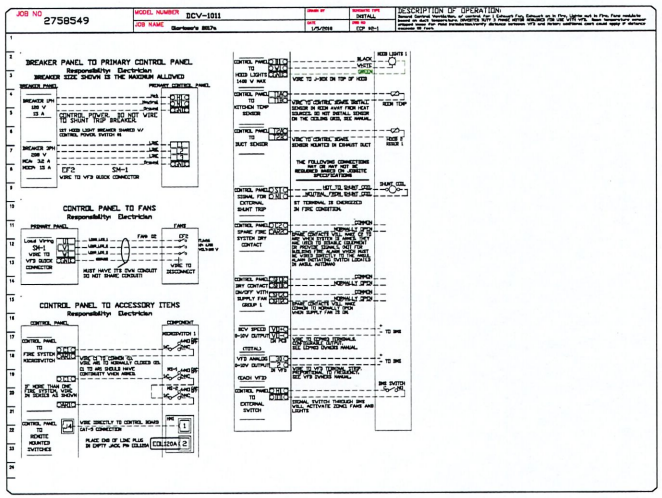

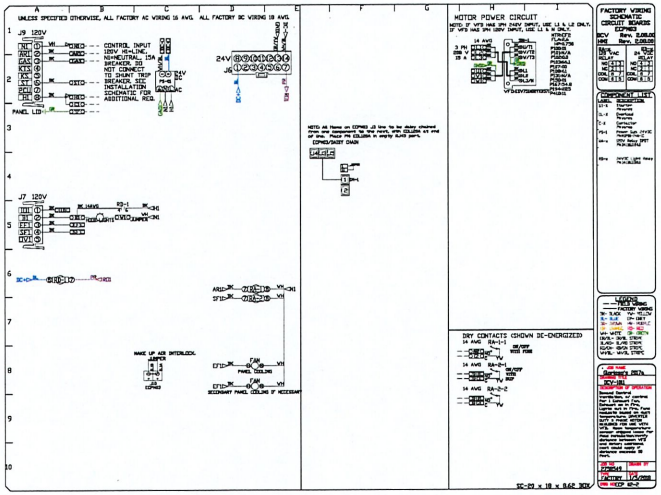

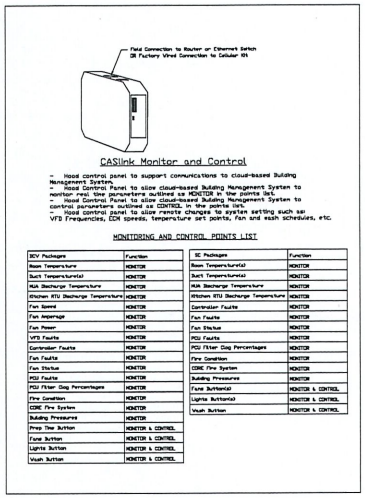

DCV Packages	Function	DC Packages	Function
Room Temperature	MONITOR	Room Temperature(s)	MONITOR
Duct Temperature(s)	MONITOR	Duct Temperature(s)	MONITOR
MUA Discharge Temperature	MONITOR	MUA Discharge Temperature	MONITOR
Kitchen RTU Discharge Temperature	MONITOR	Kitchen RTU Discharge Temperature	MONITOR
Fan Speed	MONITOR	Controller Faults	MONITOR
Fan Amperage	MONITOR	Fan Faults	MONITOR
Fan Power	MONITOR	Fan Status	MONITOR
VFD Faults	MONITOR	PGI Faults	MONITOR
Controller Faults	MONITOR	PGI Filter Dwg Percentages	MONITOR
Fan Faults	MONITOR	Fire Condition	MONITOR
Fan Status	MONITOR	CDHC Fire System	MONITOR
PGI Faults	MONITOR	Building Pressures	MONITOR
PGI Filter Dwg Percentages	MONITOR	Fans Buttons(s)	MONITOR & CONTROL
Fire Condition	MONITOR	Lights Buttons(s)	MONITOR & CONTROL
CDHC Fire System	MONITOR	Wash Button	MONITOR & CONTROL
Building Pressures	MONITOR		
Prep Time Button	MONITOR & CONTROL		
Fans Button	MONITOR & CONTROL		
Lights Button	MONITOR & CONTROL		
Wash Button	MONITOR & CONTROL		

Description
12" Wide x 42" Long x 24" High
Utility Cabinet
Total Hood Duct Stats: 1

Note: To be wall mounted at or above ceiling with threaded rod, by hood installer.

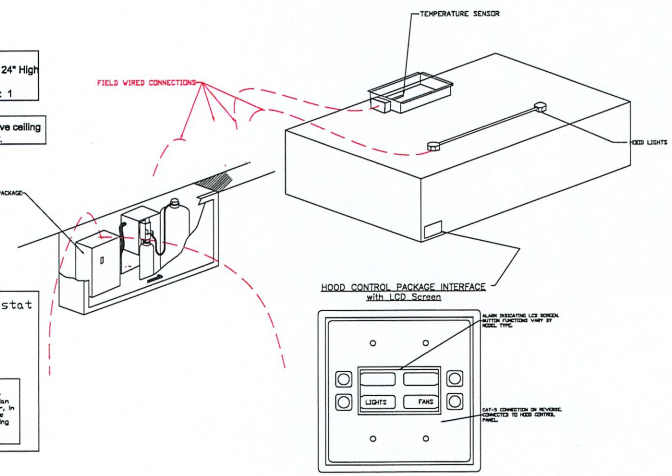

Room Override Thermostat

Provides room override based on temperature differential between the room and duct. Installed by electrician on a wall, 3'-6' off the finished floor, in the space but not directly under the hood or close to an appliance (including the electrical control box) so the reading is accurate for space.

DUCT THERMISTOR SENSOR INSTALLATION
NOTE: Thermistor has 2 wires that connect to control cabinet

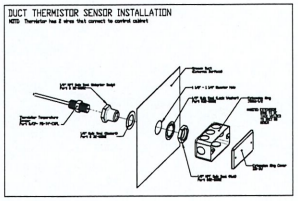

REVISIONS

DESCRIPTION	DATE

CAPTIVEAIRE
WISCONSIN OFFICE
www.captiveaire.com
609 Bridge Street, Grafton, WI, 53024 PHONE: (262) 241-9210 FAX: (919) 227-5945 EMAIL: mg78@captiveaire.com

Glorioso's 2017a
1018 E. Brady St,
MILWAUKEE, WI, 53202

DATE: 1/5/2018

DWG.#: 2758549

DRAWN BY: JFW

SCALE: 3/4" = 1'-0"

MASTER DRAWING

SHEET NO. 10