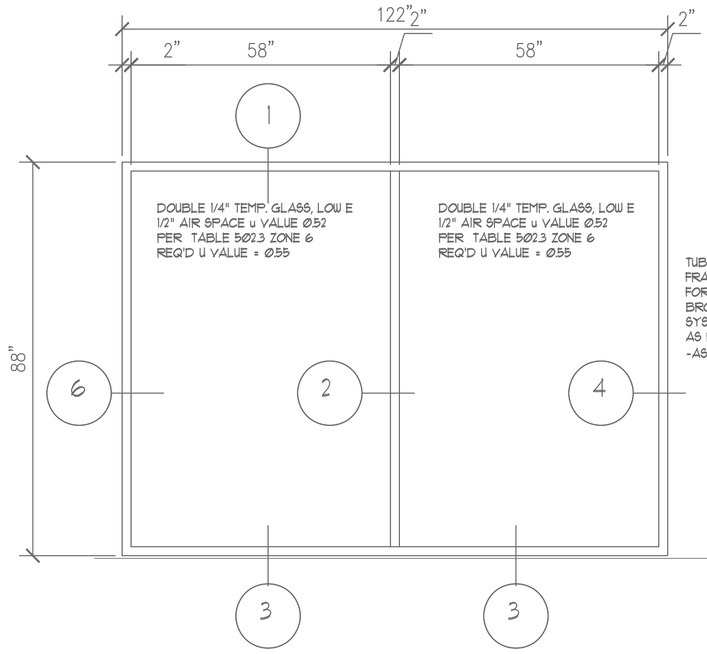

1 / A4 WINDOW ELEVATIONS

SCALE 1/2"=1'-0"

TUBELITE 14000 SERIES
FRAMING THERMALLY BROKEN
FOR 1" INSULATED GLASS
BRONZE COLOR FRAME
SYSTEM IS RATED 30 PSF
AS REQUIRED PER IBC 2009
-ASCE 7-05 MIN. 24.9 PSF

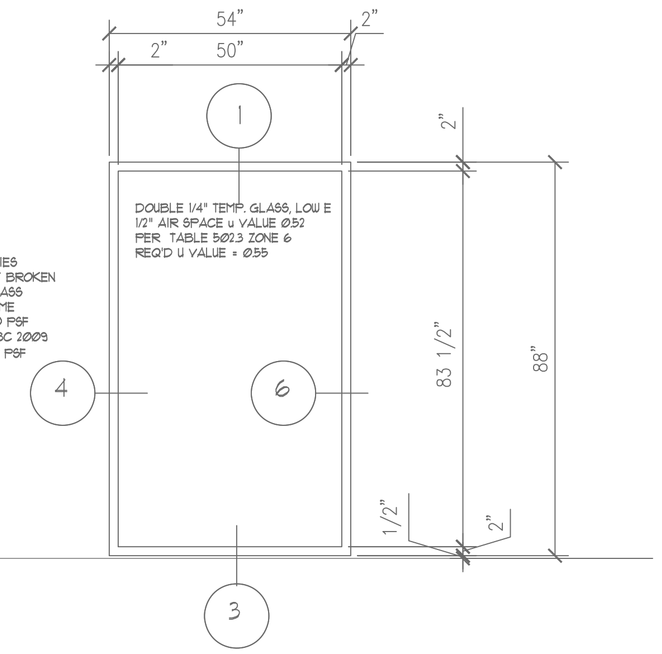

2 / A4 WINDOW ELEVATIONS

SCALE 1/2"=1'-0"

SEE ATTACHED DRAWINGS FOR
E14000 SERIES FLUSH GLAZING
SYSTEM FOR WINDOW DETAILS
REFERENCED.

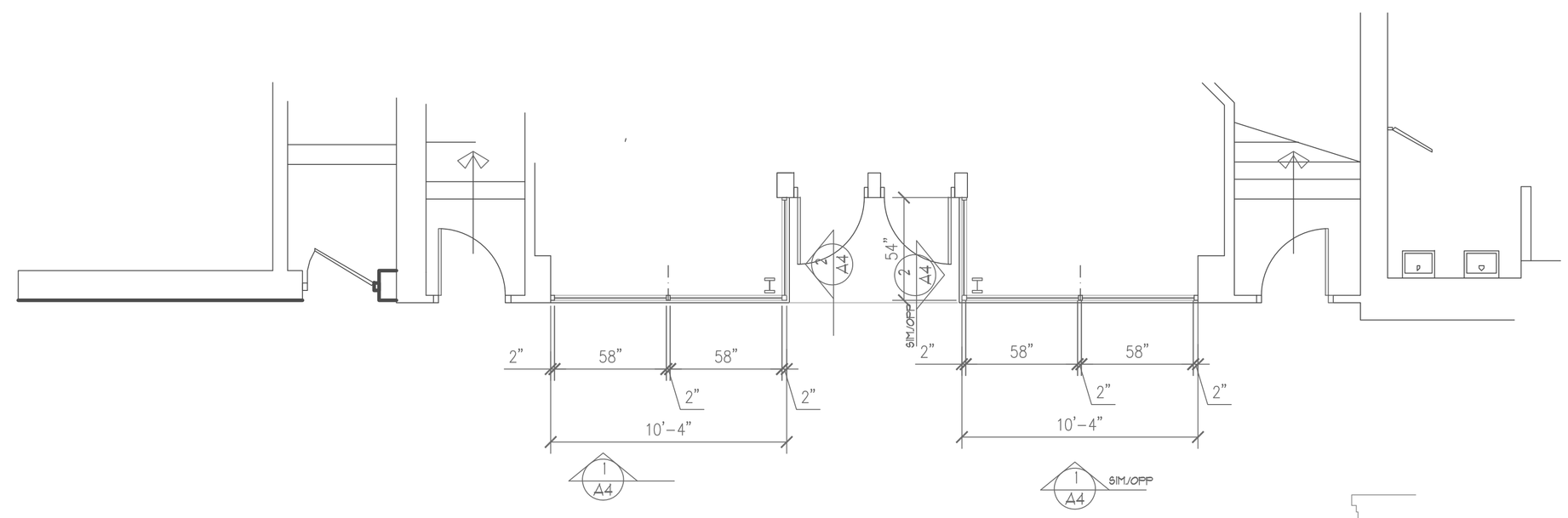

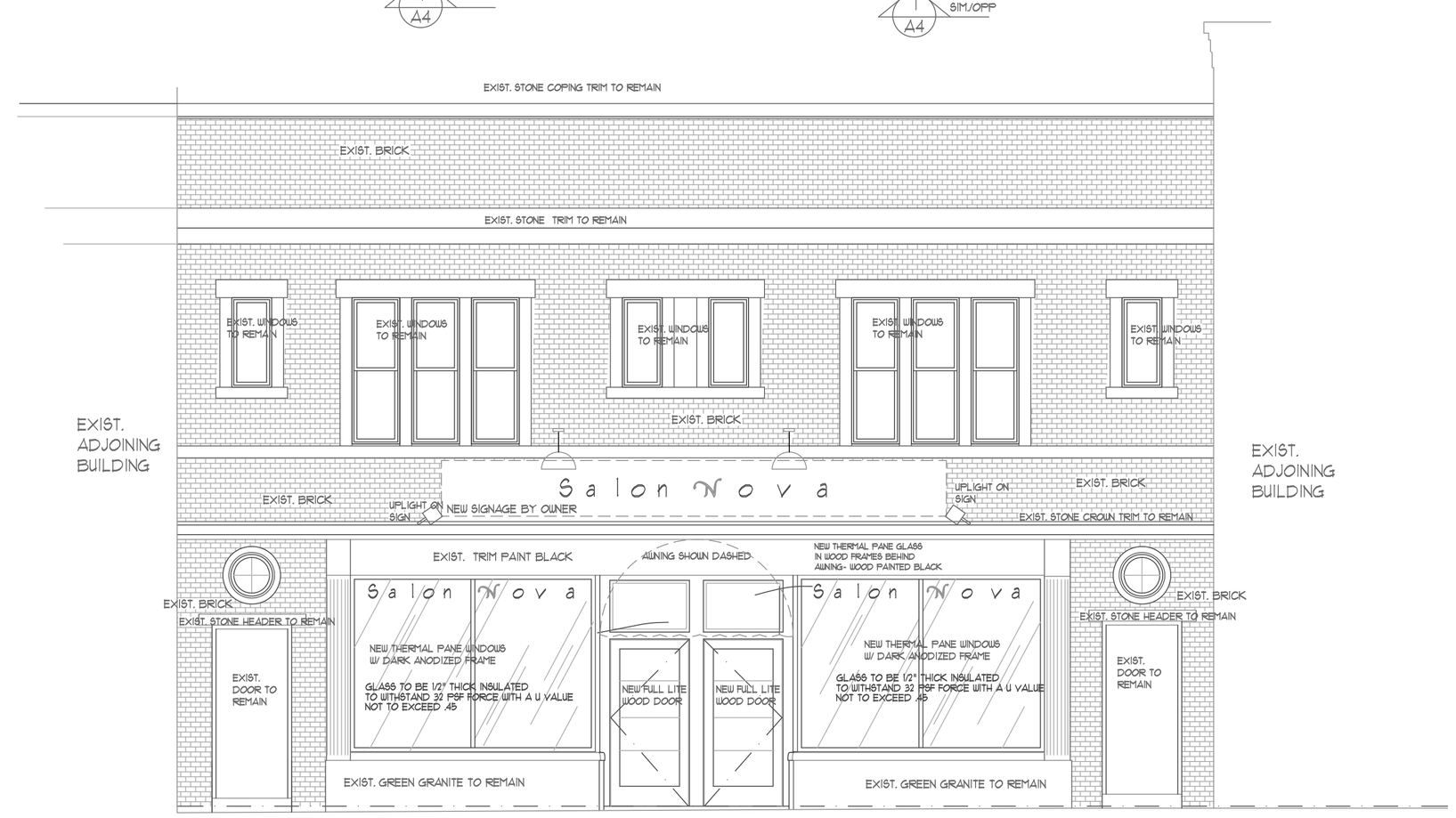

PROPOSED DOWNER STREET ELEVATION

SWEET DESIGNS
JOAN M. SWEET
ARCHITECT

1435 STONEFIELD COURT
WAUKESHA, WISCONSIN
53186
(262) 896-0388

[redacted]

PROJECT:

INTERIOR
BUILD OUT
FOR

SALON
NOVA
DOWNER

PROJECT
LOCATION:
2581 N.
DOWNER

Milwaukee
Wisconsin

[redacted]

DATE :
03/27/17

[redacted]

SHEET NO.

A-4

[redacted]