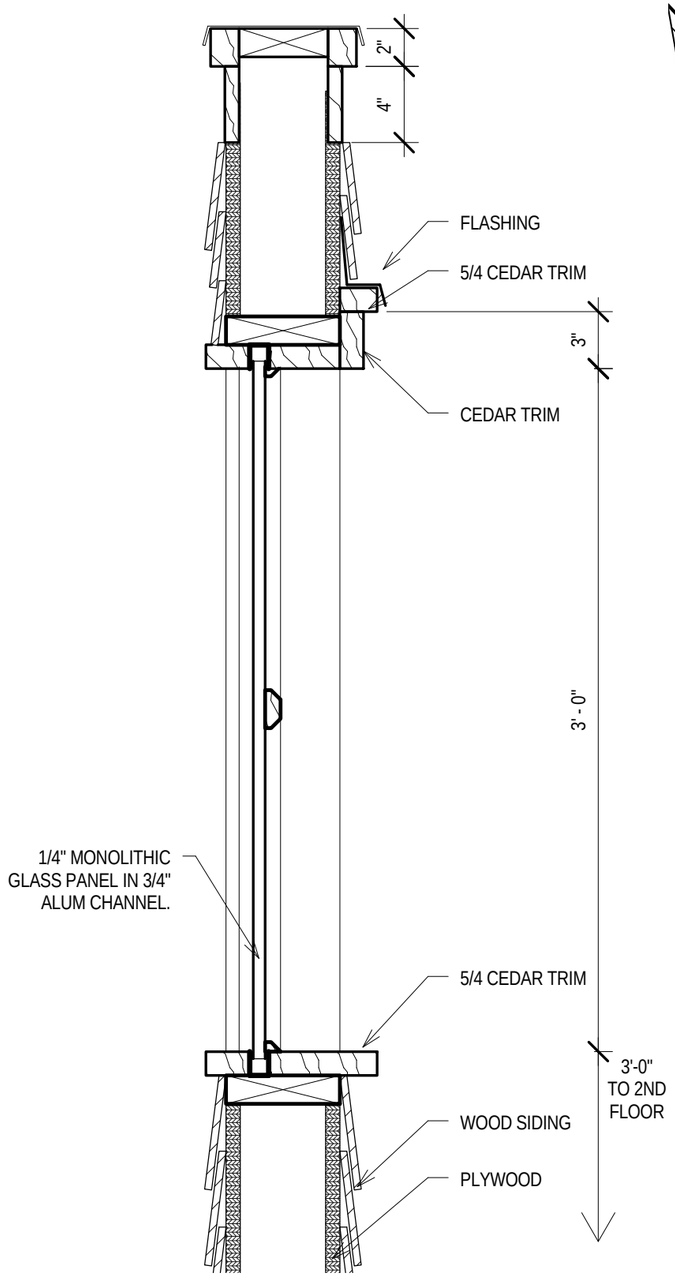

SECTION @ WINDOW SILL

NORTH ELEVATION

DATE: 01/15/2018

JO CATS ROOF DECK

1311 E. BRADY STREET

DAN BEYER ARCHITECTS

Copyright 2017, Dan Beyer Architects