ABBREVIATIONS

AFF	Above Finished Floor
ALUM	Aluminum
ARCH	Architect
BLDG	Building
BLKG	Blocking
BRG	Bearing
CLG	Ceiling
CONC	Concrete
CONSTR	Construction
CONT	Continuous
CONTR	Contract(or)
CTR	Center
DP	Deep
DBL	Double
DET	Detail
DIA	Diameter
DIM	Dimension
DN	Down
DR	Door
DS	Downspout
DWG	Drawing
EA	Each
ELEC	Electrical
ELEV	Elevation
EP	Electrical Panel
EXT	Exterior
FC	Fire Code
FD	Floor Drain
FDN	Foundation
FG	Fiberglass
FIN	Finished
FLR	Floor
FT	Foot or Feet
FTG	Footing
GYP	Gypsum
HT	Height
HC	Handicap
HDR	Header
HR	Hour
HVAC	Heating, Ventilating & Air Conditioning
INCL	Including
INSUL	Insulation
INT	Interior
JST	Joist
KD	Kiln Dried
LAV	Lavatory
LT	Light
LVL	Laminated Veneer Lumber
MAX	Maximum
MC	Moisture Content
MECH	Mechanical
MET	Metal
MFR	Manufacturer
MIN	Minimum
MISC	Miscellaneous
NIC	Not in Contract
NO	Number
NONCOM	Noncombustible
NTS	Not to Scale
O/	On, Over
OC	On Center
OPNG	Opening
OPP	Opposite
OH	Overhead
PLY	Plywood
PROP	Property
PT	Point
PVMT	Pavement
PWR	Power
PSF	Pounds per Square Foot
PSL	Parallam Structure Lumber
PLF	Per linear foot
R	Riser
RAD	Radius
REF	Refrigerator
REINF	Reinforcing
REQD	Required
REV	Revision
RM	Room
RO	Rough Opening
SECT	Section
SHT	Sheet
SHTG	Sheeting
SIM	Similar
SPEC	Specified
STD	Standard
STOR	Storage
SYP	Southern Yellow Pine
T	Tread
T & G	Tongue & Groove
TEMP	Temporary
THK	Thick
TOF	Top of Footing
TRTD	Treated
TV	Television
TYP	Typical
UL DES	Underwriters Laboratory Designation
UNO	Unless Noted Otherwise
VB	Vapor Barrier
VCT	Vinyl Composite Tile
VEN	Veneer
W	Wide
W/	With
WD	Wood
WIN	Window
W/O	Without
WP	Weatherproof
WWF	Welded Wire Fabric
&	And
@	At
℄	Center Line
DIA	Diameter

SYMBOL LEGEND

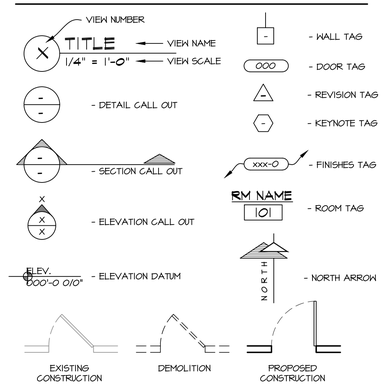

SCOPE OF DRAWING:

THESE DRAWINGS INDICATE THE GENERAL SCOPE OF THE PROJECT IN TERMS OF ARCHITECTURAL DESIGN INTENT. THE DIMENSIONS OF THE BUILDING, THE MAJOR ARCHITECTURAL ELEMENTS AND THE TYPE OF STRUCTURAL, MECHANICAL AND ELECTRICAL SYSTEMS. THE DRAWINGS DO NOT NECESSARILY INDICATE OR DESCRIBE ALL WORK REQUIRED FOR FULL PERFORMANCE AND COMPLETION OF THE REQUIREMENTS OF THE CONTRACT. ON THE BASIS OF GENERAL SCOPE INDICATED OR DESCRIBED, THE TRADE CONTRACTORS SHALL FURNISH ALL ITEMS REQUIRED FOR THE PROPER EXECUTION AND COMPLETION OF THE WORK INTENDED.

CONTRACTOR TO FIELD VERIFY ALL DIMENSIONS AND THE EXACT LOCATION OF EXISTING PLUMBING, MECHANICAL, AND STRUCTURAL COMPONENTS AND NOTIFY THE ARCHITECT IN WRITING OF ANY DISCREPANCIES.

PLAN NOTES:

1. ALTHOUGH EVERY EFFORT HAS BEEN MADE IN PREPARING THESE PLANS AND CHECKING THEM FOR ACCURACY, THE CONTRACTORS MUST REVIEW ALL DETAILS OF THEIR TRADES AND BE RESPONSIBLE FOR THE SAME.
2. DO NOT SCALE DIMENSIONS FROM DRAWINGS. CONSULT THE ARCHITECT WITH ANY QUESTIONS.
3. ALL INTERIOR WALLS ARE DIMENSIONED FINISH TO FINISH UNLESS NOTED OTHERWISE.
4. PLACEMENT OF BUILDING COMPONENTS, MECHANICAL EQUIP. APPLIANCES AND ELECTRICAL COMPONENTS IS SUBJECT TO FIELD ADJUSTMENT. ACTUAL CONSTRUCTION MAY NOT CONFORM EXACTLY TO THE LOCATIONS INDICATED ON THESE DRAWINGS

GENERAL NOTES:

1. THE DESIGNER MAINTAINS NO RESPONSIBILITY FOR THE GENERAL CONTRACTOR, SUBCONTRACTORS, OR THOSE WORKING IN SUCH CAPACITIES, FOR THE METHODS USED, OR LACK THEREOF, IN THE EXECUTION OF THE WORK AND SAFETY PROCEDURES AND PRECAUTIONS TAKEN AT THE PROJECT SITE.
2. CONTRACTORS SHALL ASSUME FULL RESPONSIBILITY - UNRELIEVED BY REVIEW OF SHOP DRAWINGS NOR BY SUPERVISION OR PERIODIC OBSERVATION OF CONSTRUCTION FOR COMPLIANCE WITH THE CONTRACT DOCUMENTS - FOR DIMENSIONS TO BE CONFIRMED AND CORRELATED ON THE JOB SITE AND BETWEEN INDIVIDUAL DRAWINGS OR SETS OF DRAWINGS; FOR FABRICATION PROCESSES AND CONSTRUCTION TECHNIQUES (INCLUDING EXCAVATION, SHORING AND SCAFFOLDING, BRACING, ERECTION, FORM WORK, ETC.); FOR COORDINATION OF THE VARIOUS TRADES; FOR SAFE CONDITIONS ON THE JOB SITE; AND FOR THE PROTECTION OF THE PEOPLE AND PROPERTY AT THE JOB SITE.
3. THE INFORMATION CONTAINED ON THE DRAWINGS IS IN ITSELF INCOMPLETE, AND VOID UNLESS USED IN CONJUNCTION WITH ALL THE SPECIFICATIONS, TRADE PRACTICES, OR APPLICABLE STANDARDS, CODES, ETC., INCORPORATED THEREIN BY REFERENCE, OF WHICH THE CONTRACTOR CERTIFIES KNOWLEDGE BY SIGNING THE CONTRACT.
4. UNLESS NOTED OTHERWISE, ALL DETAILS, SECTIONS, AND NOTES ON THE DRAWINGS ARE INTENDED TO BE TYPICAL FOR SIMILAR SITUATIONS ELSEWHERE
5. UNLESS OTHERWISE SHOWN OR NOTED, THE GENERAL CONTRACTOR SHALL BE RESPONSIBLE FOR COORDINATING THE LOCATION AND THE PLACEMENT OF ANY INSERTS, HANGARS, PIPE SLEEVES, HOLES OR ANCHOR BOLTS THAT ARE REQUIRED BY THE MECHANICAL OR ELECTRICAL EQUIPMENT.
6. THE CONTRACTOR SHALL COMPLY WITH THE LATEST OCCUPATIONAL SAFETY HEALTH ACT REQUIREMENTS.
7. ALL STATE OF WISCONSIN, LOCAL AND O.S.H.A. SAFETY CODES SHALL BE A PART OF THESE PLANS, AND IT SHALL BE THE RESPONSIBILITY OF THE GENERAL CONTRACTOR TO SEE THAT ALL PARTIES THAT WORK AT OR VISIT THE JOB SITE COMPLY WITH SAME.

BUILDING DATA :

2015 IBC CODE

USE AND OCCUPANCY CLASSIFICATION; (chapter-3)	SEPARATED MIXED USE: "A-2" ASSEMBLY IS MOST RESTRICTIVE FIRST FLOOR: "A-2" ASSEMBLY SECOND FLOOR: "R-3" RESIDENTIAL GARAGE: "S-2" LOW HAZARD STORAGE
ALLOWABLE AREA AND HEIGHT;	A-2 - "V-B" ONE STORY - 6,000 sq. ft. R-3 - "V-B" THREE STORIES - UNLIMITED sq. ft. S-2 - "V-B" TWO STORIES - 13,500 sq. ft.
ACTUAL AREA;	SECOND FLOOR AREA: 2,880 sq. ft. FIRST FLOOR AREA: 2,533 sq. ft.
SPRINKLERS;	NONE
CONSTRUCTION TYPE; (Table-601)	"V-B"

FIRE RATINGS (per table 601 & 602)

STRUCTURAL FRAME;	0 - HR. RATING
BEARING WALLS EXTERIOR;	0 - HR. RATING
BEARING WALLS INTERIOR;	0 - HR. RATING
NON-BEARING WALLS EXTERIOR;	0 - HR. RATING
NON- BEARING WALLS INTERIOR;	0- HR. RATING
FLOOR CONSTRUCTION;	0 - HR. RATING
ROOF CONSTRUCTION;	0 - HR. RATING
(Table-602)	
LOT LINE SEPARATION ($5 \leq x < 10$);	
A-2	1 - HR. RATING
R-3	1 - HR. RATING
(Table-508.4)	
OCCUPANCY SEPARATION:	
A2-S2:	1 - HR. RATING
A2-R3:	2 - HR. RATING
S2-R3:	2 - HR. RATING
(706.4A)	
PARTY WALL; A-2	2 - HR. RATING

EXIT TRAVEL DISTANCE; (table 1017.2)	200 feet
COMMON PATH OF TRAVEL; (per 1006.2.1)	75 feet
TOTAL OCCUPANCY LOADING (per TABLE 1004.1.1)	ASSUME FUTURE "A-2" ASSEMBLY USE (99 MAX OCCUPANCY 1ST FLOOR)
PLUMBING FIXTURE REQUIREMENTS: (per TABLE 2902.1)	
WATER CLOSETS "A-2 RESTAURANT"	2 SINGLE USER RESTROOMS PROPOSED

SHEET INDEX

ARCHITECTURAL:

T.100	TITLE SHEET, FRONT ELEVATION BUILDING DATA, LOCATION PLAN, GENERAL NOTES, & SHEET INDEX
F.001	FIRE RATING PLAN
A.001	STANDARD MOUNTING HEIGHTS & GENERIC ACCESSIBILITY STANDARDS
A.002	EGRESS & OCCUPANCY PLAN
A.100	FIRST FLOOR PLAN, ENLARGED RESTROOM PLAN, WALL TYPES & DUMPSTER PLAN/SECTION
A.101	SECOND FLOOR PLAN
A.102	ROOF PLAN, & ROOF DRAIN DETAILS
A.200	ELEVATIONS
A.201	ELEVATIONS
A.300	SECTIONS & DETAILS
A.301	SECTIONS & DETAILS
A.302	SECTIONS & DETAILS
A.303	SECTIONS & DETAILS
A.304	STOREFRONT WINDOWS, HEAD, JAMB, & SILL DETAILS

STRUCTURAL:

S.001	GENERAL NOTES
S.002	DRIFTED SNOW PLAN
S.101	FOUNDATION PLAN
S.102	SECTIONS & DETAILS
S.103	SECTIONS & DETAILS
S.201	SECOND FLOOR FRAMING PLAN
S.301	ROOF FRAMING PLAN

Digitally signed by Tim Askin - Milwaukee HPC
Date: 2021.02.18 13:12:00 -06'00'

APPROVED
By Tim Askin - Milwaukee HPC at 1:11 pm, Feb 18, 2021

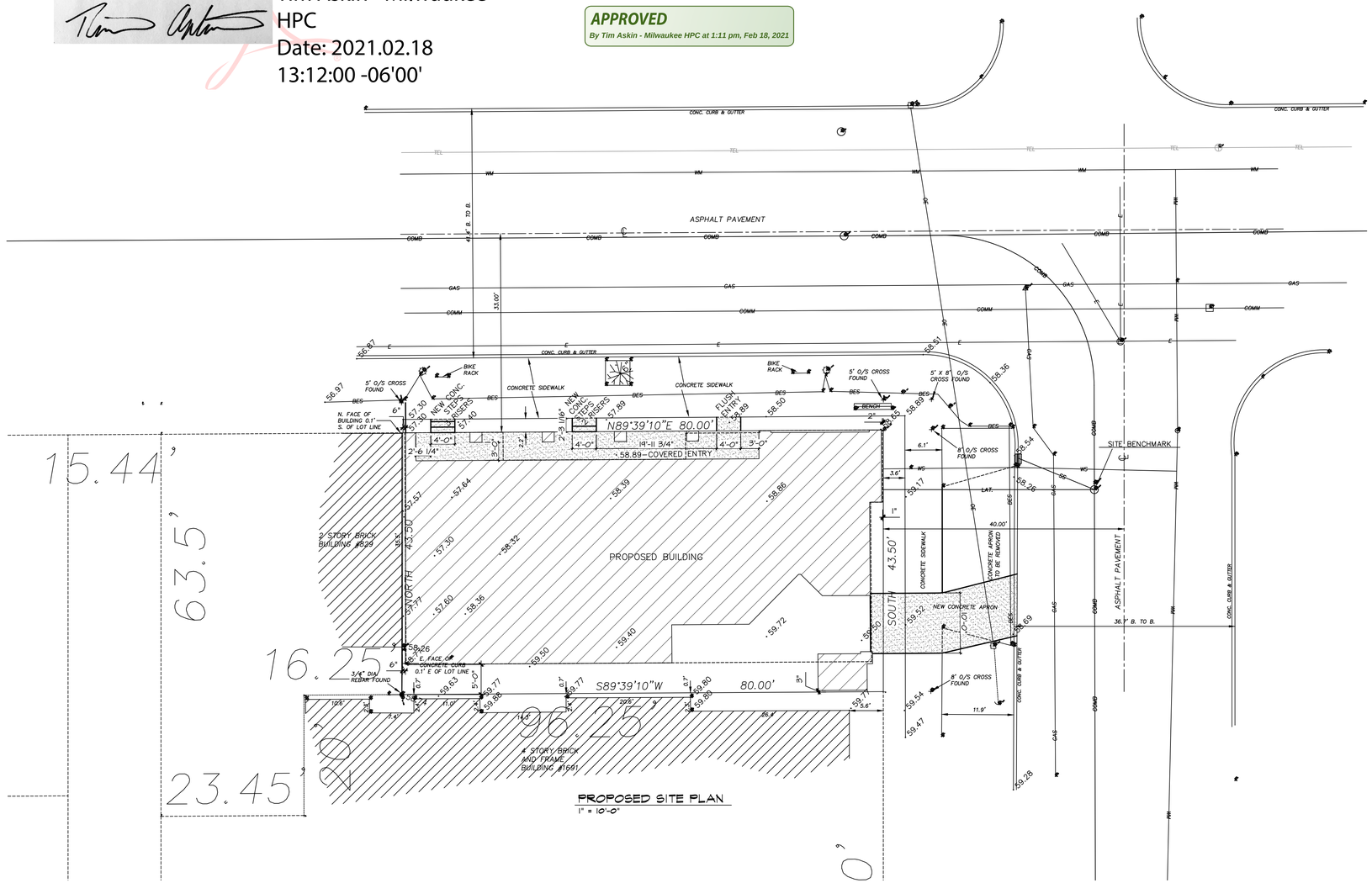

PROPOSED SITE PLAN
1" = 10'-0"

PATERA LLC
Excellence in Architecture
2601 S. Sunny Slope Rd. • New Berlin, WI 53151
262-786-6776 FAX 262-786-7036

REVISIONS:
11/26/19: PRELIM #1
12/20/19: PRELIM #2
2/7/20: HPC SUBMITTAL
6/8/20: PROGRESS SET
7/8/20: CD'S ISSUED
8/25/20: REVISED CD'S
9/3/20: REVISED CD'S
11/16/20:SITE PLAN INFO
12/22/20: REVISIONS 1
1/13/21: REVISIONS

BRADY & MARSHALL MIXED USE

BRADY STREET
MILWAUKEE, WI

SHEET TITLE:
TITLE SHEET, FRONT ELEV. BUILDING DATA, LOCATION PLAN, GEN. NOTES, & SHEET INDEX

T.100

DATE: OCT. 24TH, 2019

PROJECT NUMBER: 19-419

COPYRIGHT: PATERA LLC...IT IS UNLAWFUL FOR ANYONE TO USE OR REPRODUCE BY ANY MEANS ALL OR ANY PORTION OF THESE CONSTRUCTION DOCUMENTS WITHOUT THE EXPRESSED WRITTEN PERMISSION OF PATERA LLC.

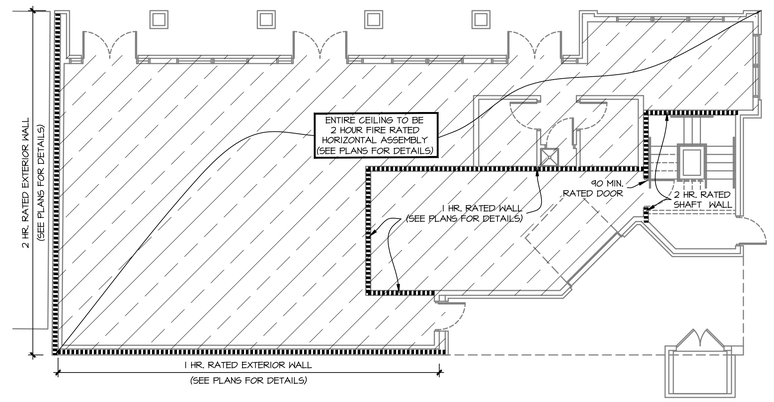

NORTH

PROPOSED FIRST FLOOR FIRE RATING PLAN

1/8" = 1'-0"

APPROVED

By Tim Askin - Milwaukee HPC at 1:11 pm, Feb 18, 2021

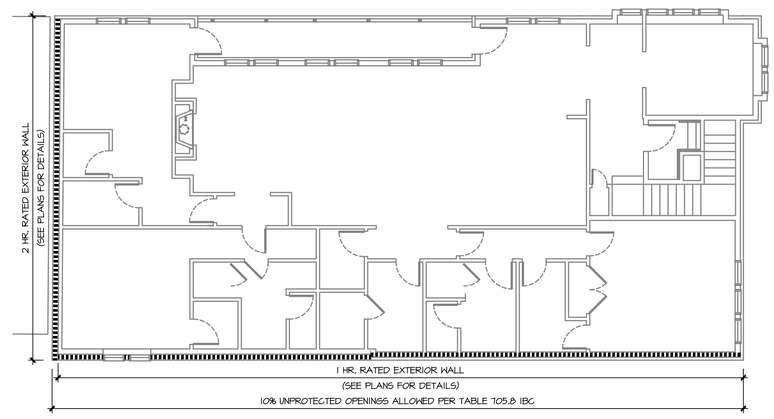

NORTH

PROPOSED SECOND FLOOR FIRE RATING PLAN

1/8" = 1'-0"

PATERA LLC
Excellence in Architecture
2601 S. Sunny Slope Rd. • New Berlin, WI 53151
262-786-6776 FAX 262-786-7036

REVISIONS:
11/26/19: PRELIM #1
12/20/19: PRELIM #2
2/7/20: HPC SUBMITTAL
6/8/20: PROGRESS SET
7/8/20: CD'S ISSUED
8/25/20: REVISED CD'S
9/3/20: REVISED CD'S
11/16/20:SITE PLAN INFO
12/22/20: REVISIONS 1
1/13/21: REVISIONS

BRADY & MARSHALL MIXED USE

BRADY STREET
MILWAUKEE, WI

SHEET TITLE:
FIRE RATING PLAN

F.001

DATE: OCT. 24TH, 2019

PROJECT NUMBER: 19-419

COPYRIGHT: PATERA LLC.:IT IS UNLAWFUL FOR ANYONE TO USE OR REPRODUCE BY ANY MEANS ALL OR ANY PORTION OF THESE CONSTRUCTION DOCUMENTS WITHOUT THE EXPRESSED WRITTEN PERMISSION OF PATERA LLC.

306.3 Knee Clearance.

306.3.1 General. Space under an element between 9 inches (230 mm) and 27 inches (685 mm) above the finish floor or ground shall be considered knee clearance and shall comply with 306.3.

306.3.2 Maximum Depth. Knee clearance shall extend 25 inches (635 mm) maximum under an element at 9 inches (230 mm) above the finish floor or ground.

306.3.3 Minimum Required Depth. Where knee clearance is required under an element as part of a clear floor space, the knee clearance shall be 11 inches (280 mm) deep minimum at 9 inches (230 mm) above the finish floor or ground, and 8 inches (205 mm) deep minimum at 27 inches (685 mm) above the finish floor or ground.

306.3.4 Clearance Reduction. Between 9 inches (230 mm) and 27 inches (685 mm) above the finish floor or ground, the knee clearance shall be permitted to reduce at a rate of 1 inch (25 mm) in depth for each 6 inches (150 mm) in height.

306.3.5 Width. Knee clearance shall be 30 inches (760 mm) wide minimum.

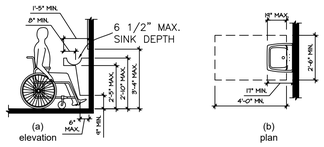

Figure 306.3 Knee Clearance

306 Knee and Toe Clearance

306.2 Toe Clearance.

306.2.1 General. Space under an element between the finish floor or ground and 9 inches (230 mm) above the finish floor or ground shall be considered toe clearance and shall comply with 306.2.

306.2.2 Maximum Depth. Toe clearance shall extend 25 inches (635 mm) maximum under an element.

306.2.3 Minimum Required Depth. Where toe clearance is required at an element as part of a clear floor space, the toe clearance shall extend 17 inches (430 mm) minimum under the element.

306.2.4 Additional Clearance. Space extending greater than 6 inches (150 mm) beyond the available knee clearance at 9 inches (230 mm) above the finish floor or ground shall not be considered toe clearance.

306.2.5 Width. Toe clearance shall be 30 inches (760 mm) wide minimum.

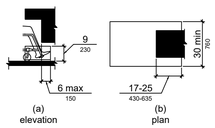

Figure 306.2 Toe Clearance

308.2.2 Obstructed High Reach. Where a high forward reach is over an obstruction, the clear floor space shall extend beneath the element for a distance not less than the required reach depth over the obstruction. The high forward reach shall be 48 inches (1220 mm) maximum where the reach depth is 20 inches (510 mm) maximum. Where the reach depth exceeds 20 inches (510 mm), the high forward reach shall be 44 inches (1120 mm) maximum and the reach depth shall be 25 inches (635 mm) maximum.

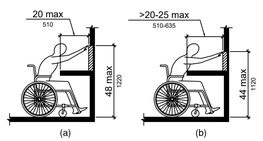

308.3 Side Reach.

308.3.1 Unobstructed. Where a clear floor or ground space allows a parallel approach to an element and the side reach is unobstructed, the high side reach shall be 48 inches (1220 mm) maximum and the low side reach shall be 15 inches (380 mm) minimum above the finish floor or ground.

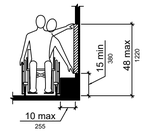

308.3.2 Obstructed High Reach. Where a clear floor or ground space allows a parallel approach to an element and the high side reach is over an obstruction, the height of the obstruction shall be 34 inches (865 mm) maximum and the depth of the obstruction shall be 24 inches (610 mm) maximum. The high side reach shall be 48 inches (1220 mm) maximum for a reach depth of 10 inches (255 mm) maximum. Where the reach depth exceeds 10 inches (255 mm), the high side reach shall be 46 inches (1170 mm) maximum for a reach depth of 24 inches (610 mm) maximum.

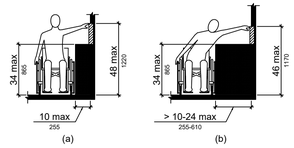

Figure 308.3.2 Obstructed High Side Reach

404.2.10 Door and Gate Surfaces. Swinging door and gate surfaces within 10 inches (255 mm) of the finish floor or ground measured vertically shall have a smooth surface on the push side extending the full width of the door or gate. Parts creating horizontal or vertical joints in these surfaces shall be within 1/16 inch (1.6 mm) of the same plane as the other. Cavities created by added kick plates shall be capped.

404.2.11 Vision Lights. Doors, gates, and side lights adjacent to doors or gates, containing one or more glazing panels that permit viewing through the panels shall have the bottom of at least one glazed panel located 43 inches (1090 mm) maximum above the finish floor.

404.3 Automatic and Power-Assisted Doors and Gates. Automatic doors and automatic gates shall comply with 404.3. Full-powered automatic doors shall comply with ANSI/BHMA A156.10 (incorporated by reference, see "Referenced Standards" in Chapter 1). Low-energy and power-assisted doors shall comply with ANSI/BHMA A156.19 (1997 or 2002 edition) (incorporated by reference, see "Referenced Standards" in Chapter 1).

404.3.2 Maneuvering Clearance. Clearances at power-assisted doors and gates shall comply with 404.2.4. Clearances at automatic doors and gates without standby power and serving an accessible means of egress shall comply with 404.2.4.

404.2.4.3 Recessed Doors and Gates. Maneuvering clearances for forward approach shall be provided when any obstruction within 18 inches (455 mm) of the latch side of a doorway projects more than 8 inches (205 mm) beyond the face of the door, measured perpendicular to the face of the door or gate.

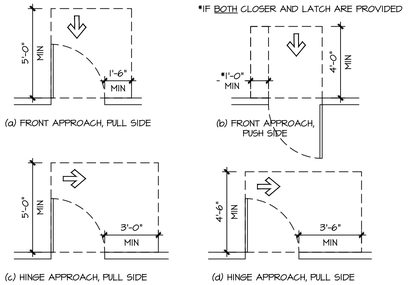

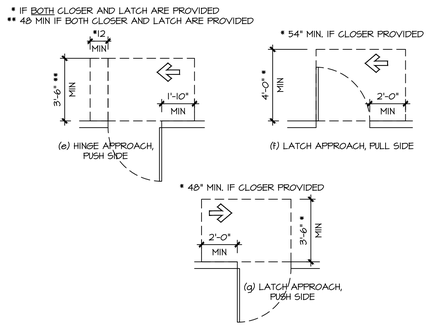

404.2.6 Doors in Series and Gates in Series. The distance between two hinged or pivoted doors in series and gates in series shall be 48 inches (1220 mm) minimum plus the width of doors or gates swinging into the space.

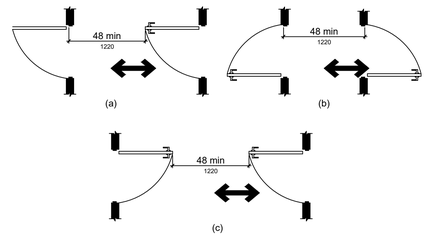

Figure 404.2.6 Doors in Series and Gates in Series

604.8.1.4 Toe Clearance. The front partition and at least one side partition shall provide a toe clearance of 9 inches (230 mm) minimum above the finish floor and 6 inches (150 mm) deep minimum beyond the compartment-side face of the partition, exclusive of partition support members. Compartments for children's use shall provide a toe clearance of 12 inches (305 mm) minimum above the finish floor.

EXCEPTION: Toe clearance at the front partition is not required in a compartment greater than 62 inches (1575 mm) deep with a wall-hung water closet or 65 inches (1650 mm) deep with a floor-mounted water closet. Toe clearance at the side partition is not required in a compartment greater than 66 inches (1675 mm) wide. Toe clearance at the front partition is not required in a compartment for children's use that is greater than 65 inches (1650 mm)deep

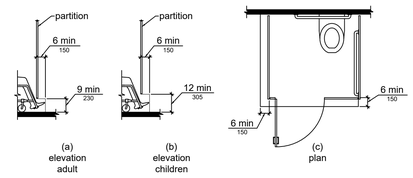

605 Urinals

605.2 Height and Depth. Urinals shall be the stall-type or the wall-hung type with the rim 17 inches (430 mm) maximum above the finish floor or ground. Urinals shall be 13 1/2 inches (345 mm) deep minimum measured from the outer face of the urinal rim to the back of the fixture.

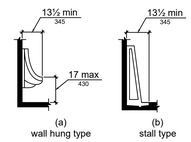

Figure 605.2 Height and Depth of Urinals

605.3 Clear Floor Space. A clear floor or ground space complying with 305 positioned for forward approach shall be provided.

605.4 Flush Controls. Flush controls shall be hand operated or automatic. Hand operated flush controls shall comply with 309.

606 Lavatories and Sinks

606.2 Clear Floor Space. A clear floor space complying with 305, positioned for a forward approach, and knee and toe clearance complying with 306 shall be provided.

606.3 Height. Lavatories and sinks shall be installed with the front of the higher of the rim or counter surface 34 inches (865 mm) maximum above the finish floor or ground.

606.4 Faucets. Controls for faucets shall comply with 309. Hand-operated metering faucets shall remain open for 10 seconds minimum.

606.5 Exposed Pipes and Surfaces. Water supply and drain pipes under lavatories and sinks shall be insulated or otherwise configured to protect against contact. There shall be no sharp or abrasive surfaces under lavatories and sinks.

CHAPTER 6: PLUMBING ELEMENTS AND FACILITIES

602 Drinking Fountains

602.2 Clear Floor Space. Units shall have a clear floor or ground space complying with 305 positioned for a forward approach and centered on the unit. Knee and toe clearance complying with 306 shall be provided.

EXCEPTION: A parallel approach complying with 305 shall be permitted at units for children's use where the spout is 30 inches (760 mm) maximum above the finish floor or ground and is 3 1/2 inches (90 mm) maximum from the front edge of the unit, including bumpers.

602.3 Operable Parts. Operable parts shall comply with 309.

602.4 Spout Height. Spout outlets shall be 36 inches (915 mm) maximum above the finish floor or ground.

602.5 Spout Location. The spout shall be located 15 inches (380 mm) minimum from the vertical support and 5 inches (125 mm) maximum from the front edge of the unit, including bumpers.

Figure 602.5 Drinking Fountain Spout Location

602.6 Water Flow. The spout shall provide a flow of water 4 inches (100 mm) high minimum and shall be located 5 inches (125 mm) maximum from the front of the unit. The angle of the water stream shall be measured horizontally relative to the front face of the unit. Where spouts are located less than 3 inches (75 mm) of the front of the unit, the angle of the water stream shall be 30 degrees maximum. Where spouts are located between 3 inches (75 mm) and 5 inches (125 mm) maximum from the front of the unit, the angle of the water stream shall be 15 degrees maximum.

602.7 Drinking Fountains for Standing Persons. Spout outlets of drinking fountains for standing persons shall be 38 inches (965 mm) minimum and 43 inches (1090 mm) maximum above the finish floor or ground.

APPROVED
By Tim Askin - Milwaukee HPC at 1:11 pm, Feb 18, 2021

2 GENERIC ACCESSIBILITY DETAILS & STANDARDS
N.T.S.

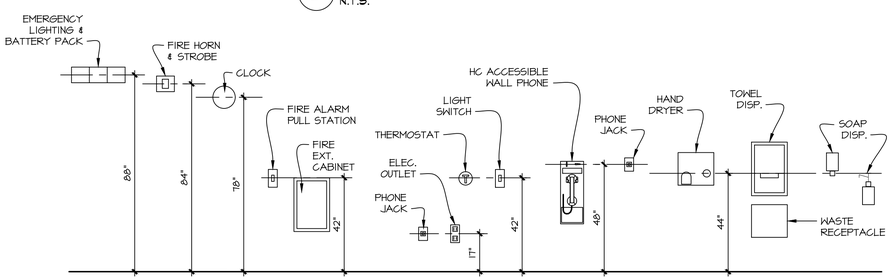

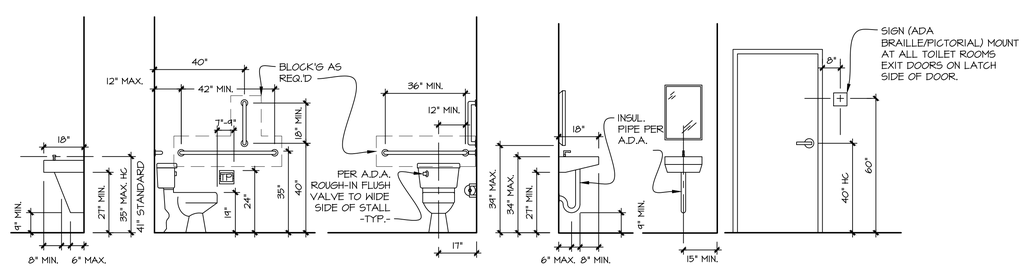

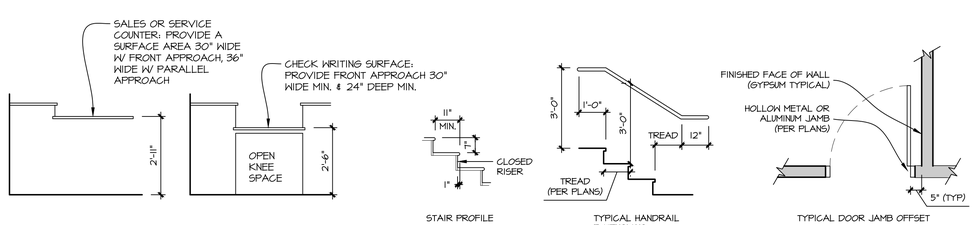

ACCESSIBILITY GUIDELINES:

LIGHT SWITCHES, ELECTRICAL OUTLETS, ELECTRIC SERVICE PANELS, THERMOSTATS, THRU-WALL A/C UNITS AND ENVIRONMENTAL CONTROLS SHALL BE LOCATED NO HIGHER THAN 48" AND NO LOWER THAN 15 INCHES, ABOVE THE FLOOR. IF THE REACH IS OVER AN OBSTRUCTION (FOR EXAMPLE, 20 AND 25 INCHES IN DEPTH, THE MAXIMUM HEIGHT IS REDUCED TO 44 INCHES FOR FORWARD APPROACH OR 46 INCHES FOR SIDE APPROACH, PROVIDED THE OBSTRUCTION IS NO MORE THAN 24 INCHES IN DEPTH).

REINFORCE ALL BATHROOM WALLS TO ALLOW LATER INSTALLATION OF GRAB BARS AROUND THE TOILET, TUB, SHOWER & SHOWER SEAT WHEN THESE FACILITIES ARE PROVIDED. REINFORCEMENT FOR GRAB BARS MAY BE PROVIDED BY PLYWOOD OR WOOD BLOCKING.

1 STANDARD MOUNTING HEIGHTS & DETAILS
3/8" = 1'-0"

PATERA LLC
Excellence in Architecture
2601 S. Sunny Slope Rd. • New Berlin, WI 53151
262-786-6776 FAX 262-786-7036

REVISIONS:
11/26/19: PRELIM #1
12/20/19: PRELIM #2
2/7/20: HPC SUBMITTAL
6/8/20: PROGRESS SET
7/8/20: CD'S ISSUED
8/25/20: REVISED CD'S
9/3/20: REVISED CD'S
11/16/20:SITE PLAN INFO
12/22/20: REVISIONS 1
1/13/21: REVISIONS

BRADY & MARSHALL MIXED USE

BRADY STREET
MILWAUKEE, WI
SHEET TITLE:
STANDARD MOUNTING HEIGHTS & GENERIC ACCESSIBILITY STANDARDS

A.001

DATE: OCT. 24TH, 2019

PROJECT NUMBER: 19-419

COPYRIGHT: PATERA LLC.:IT IS UNLAWFUL FOR ANYONE TO USE OR REPRODUCE BY ANY MEANS ALL OR ANY PORTION OF THESE CONSTRUCTION DOCUMENTS WITHOUT THE EXPRESSED WRITTEN PERMISSION OF PATERA LLC.

APPROVED
By Tim Askin - Milwaukee HPC at 1:11 pm, Feb 18, 2021

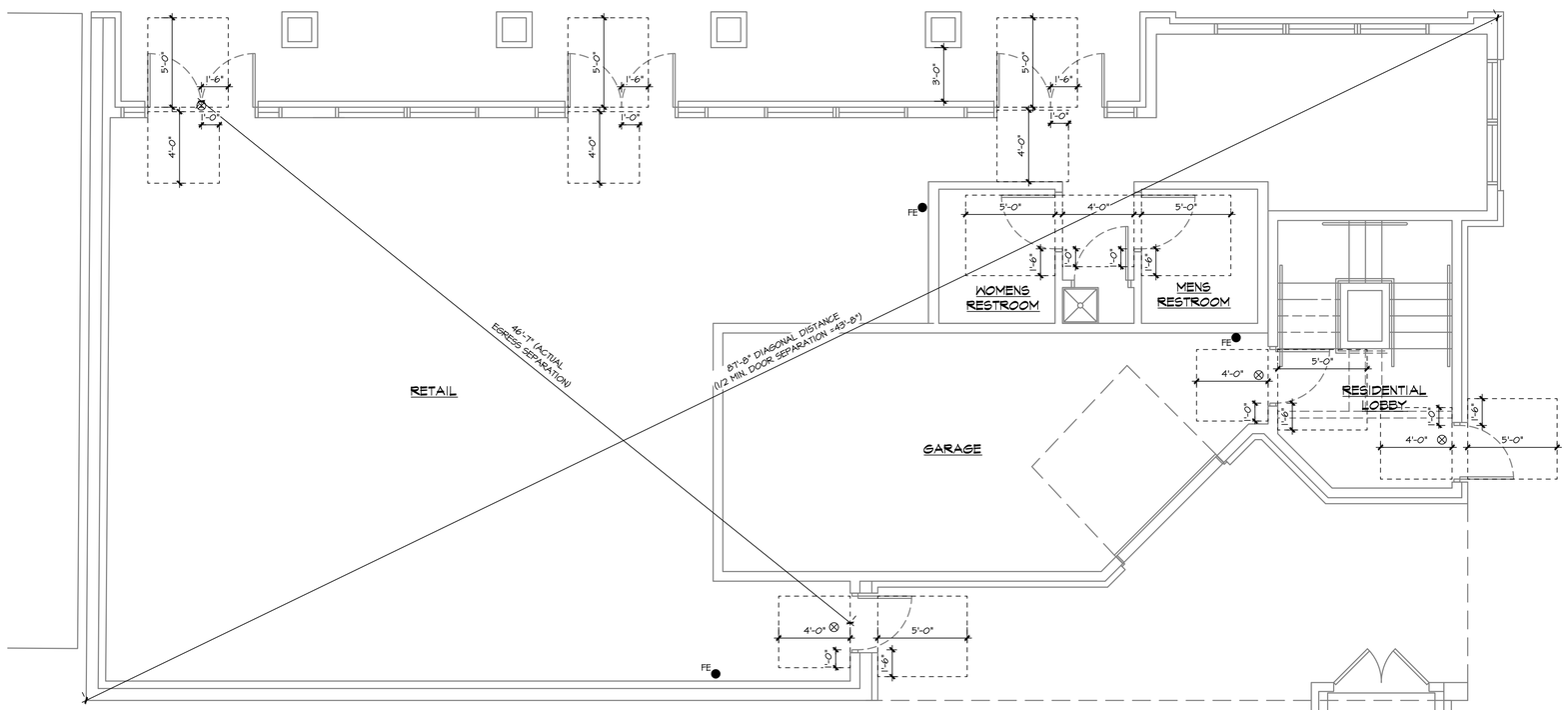

NORTH

PROPOSED OCCUPANCY & EGRESS PLAN

1/4" = 1'-0"

PLAN KEY:

⊗ = NEW ILLUMINATED "EXIT" SIGNAGE W/ EMERGENCY BACKUP LIGHTING

⊗ = NEW DIRECTIONAL, ILLUMINATED "EXIT" SIGNAGE W/ EMERGENCY BACKUP LIGHTING

FIRE EXTINGUISHER KEY:

FE ● = NEW 5LB, GLASS ABC FIRE EXTINGUISHER, "UL 2A:10B:C" IN NEW SEMI-RECESSED CABINET W/ 4" MAXIMUM PROJECTION. SEE DETAIL 1/A.100

PATERA LLC
Excellence in Architecture
2601 S. Sunny Slope Rd. • New Berlin, WI 53151
262-786-6776 FAX 262-786-7036

REVISIONS:
11/26/19: PRELIM #1
12/20/19: PRELIM #2
2/7/20: HPC SUBMITTAL
6/8/20: PROGRESS SET
7/8/20: CD'S ISSUED
8/25/20: REVISED CD'S
9/3/20: REVISED CD'S
11/16/20:SITE PLAN INFO
12/22/20: REVISIONS 1
1/13/21: REVISIONS

BRADY & MARSHALL MIXED USE

BRADY STREET
MILWAUKEE, WI

SHEET TITLE:
PROPOSED FIRST FLOOR PLAN

A.002

DATE: OCT. 24TH, 2019

PROJECT NUMBER: 19-419

COPYRIGHT: PATERA LLC...IT IS UNLAWFUL FOR ANYONE TO USE OR REPRODUCE BY ANY MEANS ALL OR ANY PORTION OF THESE CONSTRUCTION DOCUMENTS WITHOUT THE EXPRESSED WRITTEN PERMISSION OF PATERA LLC.

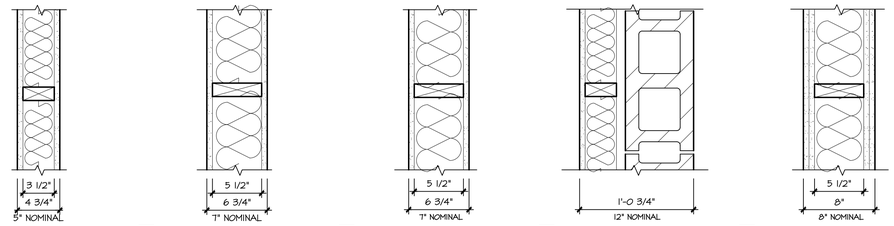

A

SOUND INSULATED INTERIOR WALL:
5/8" G.W.B. ON NON-RESTROOM SIDE OF 2x4 STUDS AT 16" O.C. 5/8" MOISTURE RESISTANT G.W.B. @ RESTROOM SIDE. 3 1/2" SOUND BATTS. RUN ALL TO CEILING ABOVE.

B

PLUMBING WALL:
5/8" G.W.B. ON NON-RESTROOM SIDE OF 2x6 STUDS AT 16" O.C. 5/8" MOISTURE RESISTANT G.W.B. @ RESTROOM SIDE. 3 1/2" SOUND BATTS. RUN ALL TO CEILING ABOVE.

C

ONE HOUR RATED FIRE PARTITION WALL:
(UL #U305)
5/8" TYPE 'X' G.W.B. ON BOTH SIDES OF 2x6 WOOD STUDS @ 16" O.C. 5 1/2" SOUND BATTS. RUN ALL TO BOTTOM OF FLOOR FRAMING OR ROOF TRUSS ABOVE. PROVIDE FIRE BLOCKING.

D

TWO HOUR RATED (FURRED) WALL:
(UL #U906, EXPOSED TO FIRE ON INTERIOR ONLY (PER IBC 705.5)
8" (2-HOUR RATED) C.M.U. BLOCK
AIRSPACE
2x4 STUD WALL @ 16" O.C.
R-13 BATT INSULATION
5/8" TYPE 'X' GYPSUM ON 4 MIL POLY

E

TWO HOUR RATED FIRE BARRIER WALL:
(UL #U301)
(2) LAYERS OF 5/8" TYPE 'X' G.W.B. ON BOTH SIDES OF 2x6 WOOD STUDS @ 16" O.C. 5 1/2" SOUND BATTS. RUN ALL TO BOTTOM OF SUB FLOOR ABOVE PROVIDE FIRE BLOCKING.

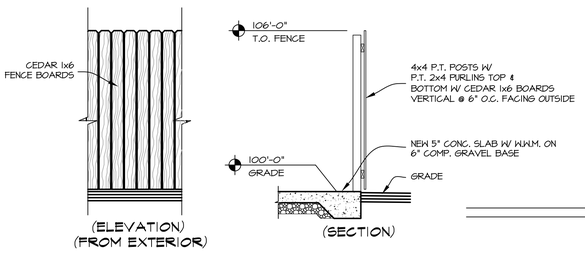

3 DUMPSTER ENCLOSURE DETAILS
3/8" = 1'-0"

APPROVED
By Tim Askin - Milwaukee HPC at 1:11 pm, Feb 18, 2021

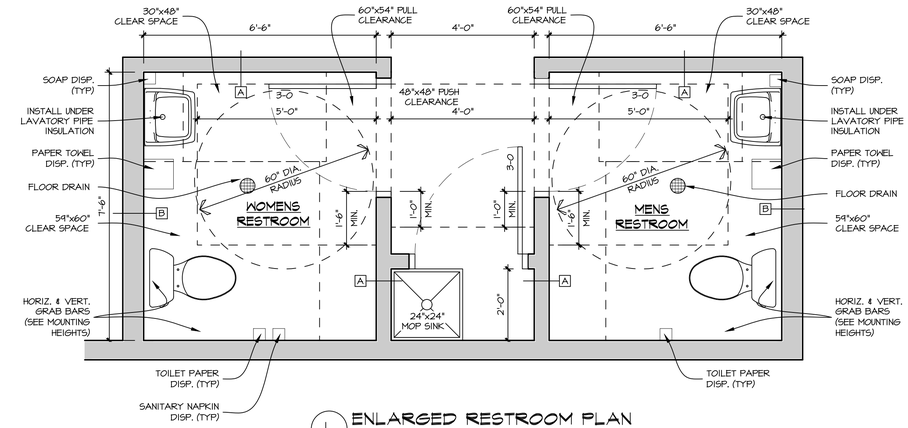

1 ENLARGED RESTROOM PLAN
1/2" = 1'-0"

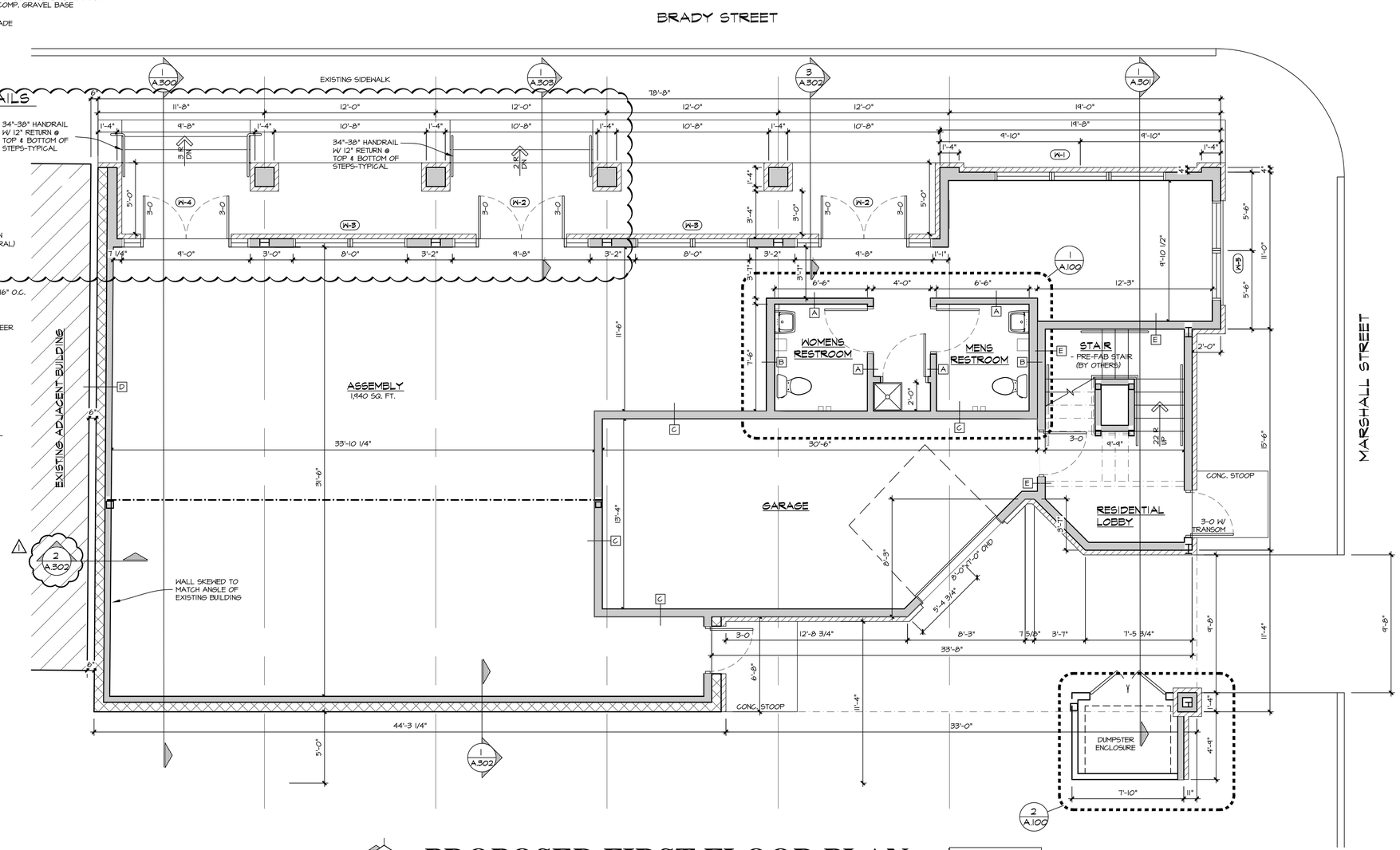

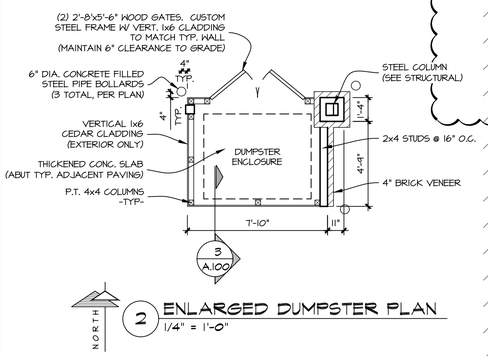

2 ENLARGED DUMPSTER PLAN
1/4" = 1'-0"

NORTH

PROPOSED FIRST FLOOR PLAN

1/4" = 1'-0"

*** SEE A.400 FOR WINDOW SIZES ***

PATERA LLC
Excellence in Architecture
2601 S. Sunny Slope Rd. • New Berlin, WI 53151
262-786-6776 FAX 262-786-7036

REVISIONS:
11/26/19: PRELIM #1
12/20/19: PRELIM #2
2/7/20: HPC SUBMITTAL
6/8/20: PROGRESS SET
7/8/20: CD'S ISSUED
8/25/20: REVISED CD'S
9/3/20: REVISED CD'S
11/16/20:SITE PLAN INFO
12/22/20: REVISIONS 1
1/13/21: REVISIONS

BRADY & MARSHALL MIXED USE

BRADY STREET
MILWAUKEE, WI
SHEET TITLE:
PROPOSED FIRST FLOOR PLAN

A.100

DATE: OCT. 24TH, 2019

PROJECT NUMBER: 19-419

COPYRIGHT: PATERA LLC...IT IS UNLAWFUL FOR ANYONE TO USE OR REPRODUCE BY ANY MEANS ALL OR ANY PORTION OF THESE CONSTRUCTION DOCUMENTS WITHOUT THE EXPRESSED WRITTEN PERMISSION OF PATERA LLC.

APPROVED
By Tim Askin - Milwaukee HPC at 1:11 pm, Feb 18, 2021

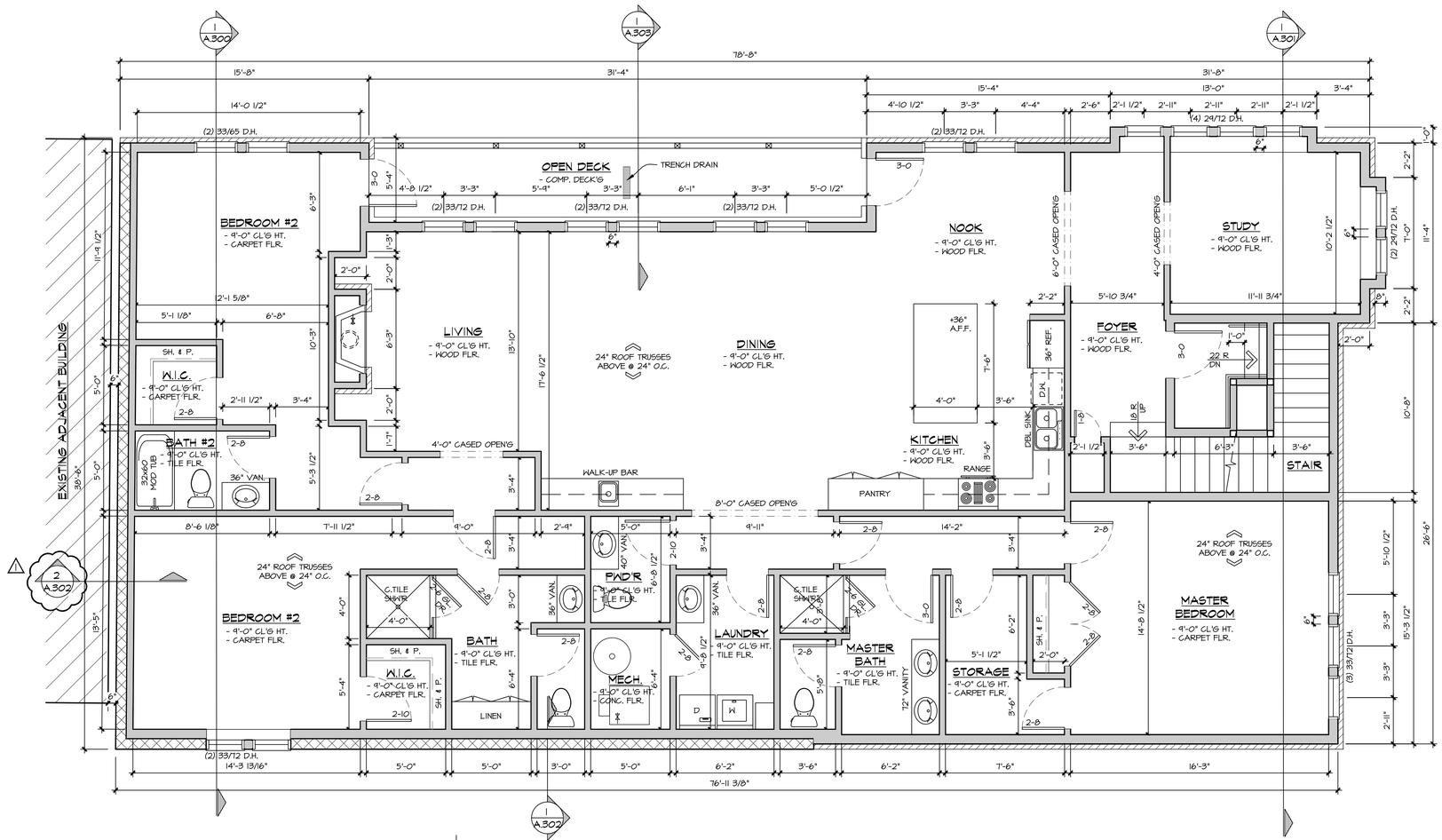

NORTH

PROPOSED SECOND FLOOR PLAN

1/4" = 1'-0"

PATERA LLC
Excellence in Architecture
2601 S. Sunny Slope Rd. • New Berlin, WI 53151
262-786-6776 FAX 262-786-7036

REVISIONS:
11/26/19: PRELIM #1
12/20/19: PRELIM #2
2/7/20: HPC SUBMITTAL
6/8/20: PROGRESS SET
7/8/20: CD'S ISSUED
8/25/20: REVISED CD'S
9/3/20: REVISED CD'S
11/16/20:SITE PLAN INFO
12/22/20: REVISIONS 1
1/13/21: REVISIONS

MIXED USE

BRADY & MARSHALL

BRADY STREET
MILWAUKEE, WI
SHEET TITLE:
PROPOSED SECOND FLOOR PLAN

A.101

DATE: OCT. 24TH, 2019

PROJECT NUMBER: 19-419

COPYRIGHT: PATERA LLC...IT IS UNLAWFUL FOR ANYONE TO USE OR REPRODUCE BY ANY MEANS ALL OR ANY PORTION OF THESE CONSTRUCTION DOCUMENTS WITHOUT THE EXPRESSED WRITTEN PERMISSION OF PATERA LLC.

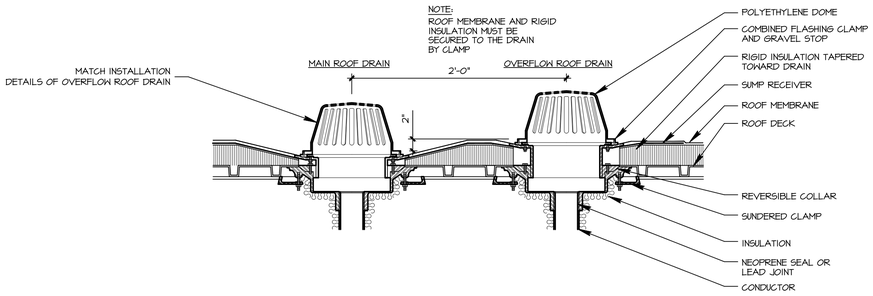

1 ROOF DRAIN WITH OVERFLOW ROOF DRAIN
1" = 1'-0"

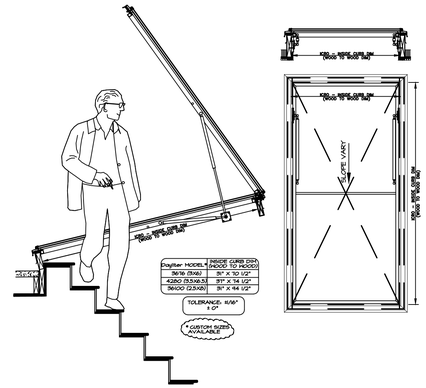

2 'DAYLITER' DOOR SECTION
1/2" = 1'-0"

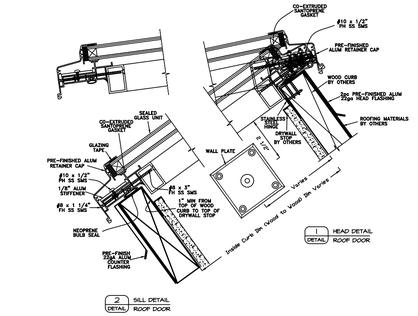

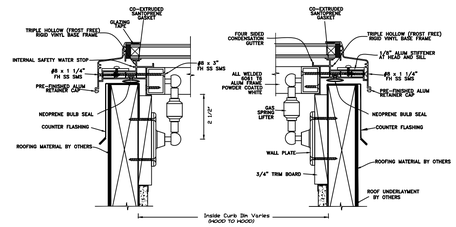

APPROVED
By Tim Askin - Milwaukee HPC at 1:11 pm, Feb 18, 2021

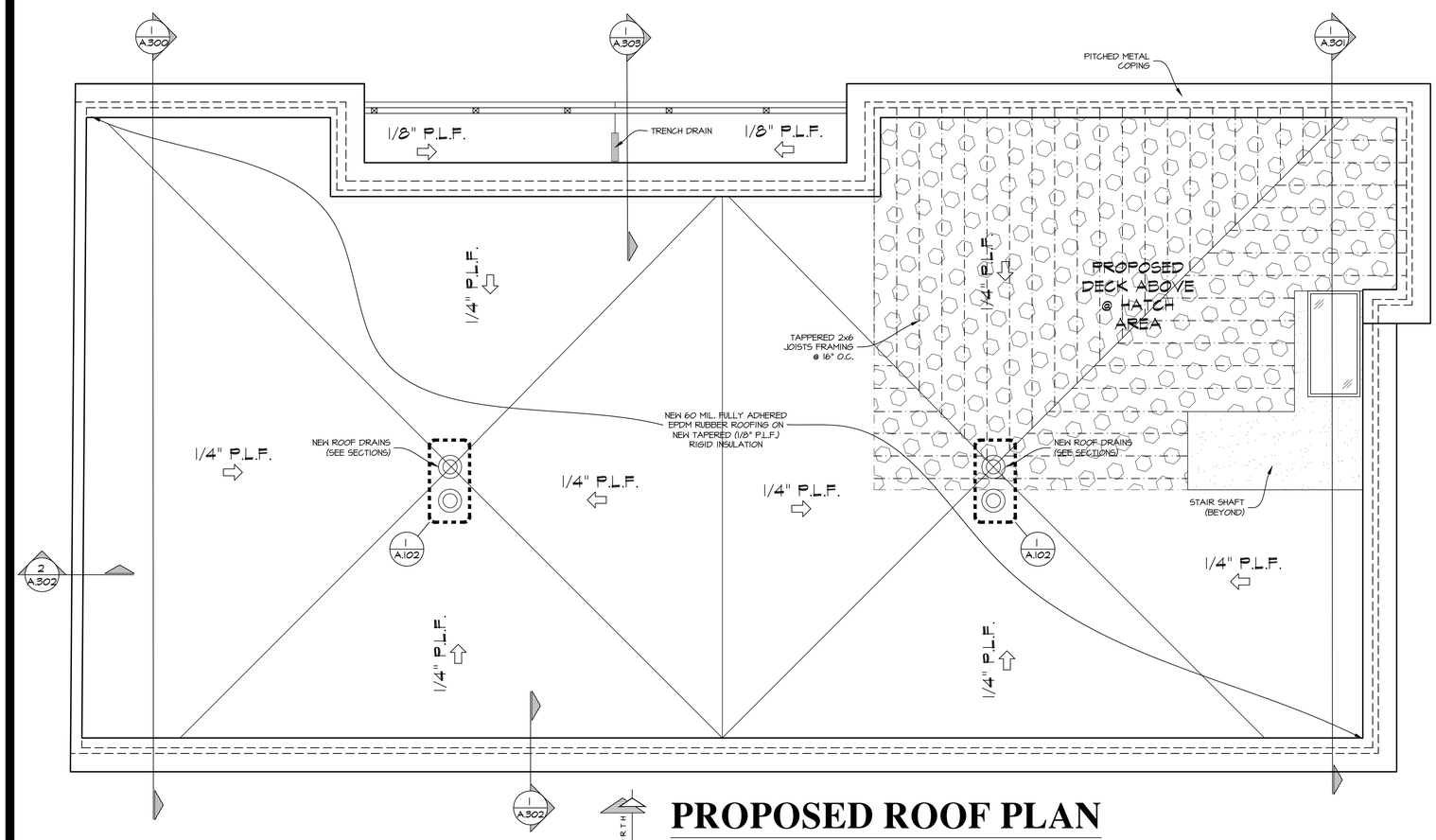

PROPOSED ROOF PLAN
1/4" = 1'-0"

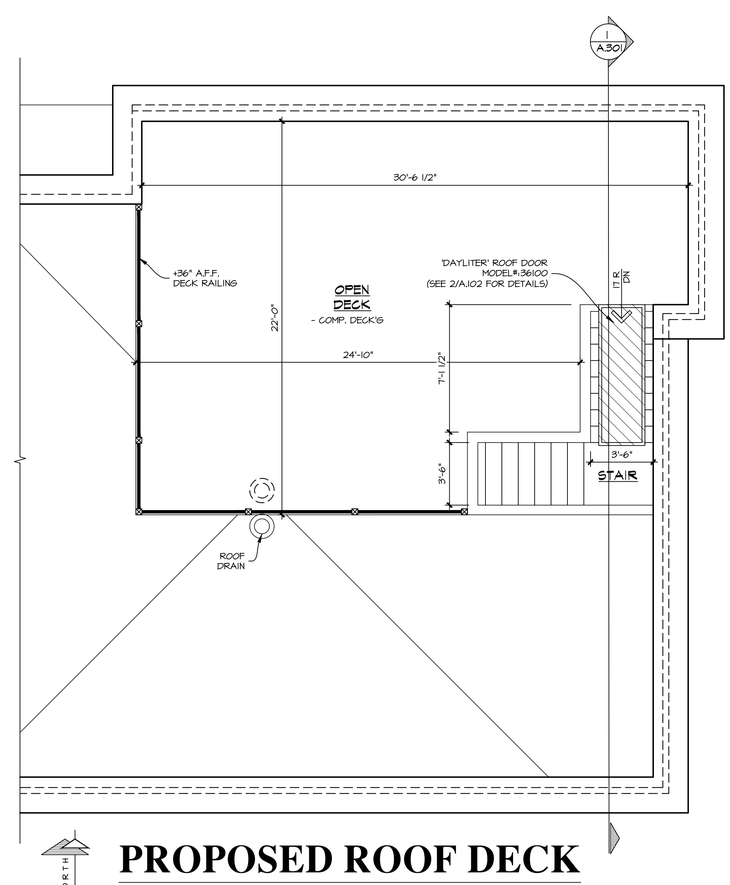

PROPOSED ROOF DECK
1/4" = 1'-0"

PATERA LLC
Excellence in Architecture
2601 S. Sunny Slope Rd. • New Berlin, WI 53151
262-786-6776 FAX 262-786-7036

REVISIONS:
11/26/19: PRELIM #1
12/20/19: PRELIM #2
2/7/20: HPC SUBMITTAL
6/8/20: PROGRESS SET
7/8/20: CD'S ISSUED
8/25/20: REVISED CD'S
9/3/20: REVISED CD'S
11/16/20:SITE PLAN INFO
12/22/20: REVISIONS 1
1/13/21: REVISIONS

FOR USE

BRADY & MARSHALL MIXED USE

BRADY STREET
MILWAUKEE, WI
SHEET TITLE:
PROPOSED ROOF PLAN, HEAD HOUSE AND DETAILS

A.102

DATE: OCT. 24TH, 2019

PROJECT NUMBER: 19-419

COPYRIGHT: PATERA LLC...IT IS UNLAWFUL FOR ANYONE TO USE OR REPRODUCE BY ANY MEANS ALL OR ANY PORTION OF THESE CONSTRUCTION DOCUMENTS WITHOUT THE EXPRESSED WRITTEN PERMISSION OF PATERA LLC.

APPROVED
By Tim Askin - Milwaukee HPC at 1:11 pm, Feb 18, 2021

PROPOSED (EAST) SIDE ELEVATION

1/4" = 1'-0"

PROPOSED (NORTH) FRONT ELEVATION

1/4" = 1'-0"

PATERA LLC
Excellence in Architecture
2601 S. Sunny Slope Rd. • New Berlin, WI 53151
262-786-6776 FAX 262-786-7036

REVISIONS:
11/26/19: PRELIM #1
12/20/19: PRELIM #2
2/7/20: HPC SUBMITTAL
6/8/20: PROGRESS SET
7/8/20: CD'S ISSUED
8/25/20: REVISED CD'S
9/3/20: REVISED CD'S
11/16/20:SITE PLAN INFO
12/22/20: REVISIONS 1
1/13/21: REVISIONS

FOR BID USE

BRADY & MARSHALL MIXED USE

BRADY STREET
MILWAUKEE, WI
SHEET TITLE:
PROPOSED ELEVATIONS

A.200

DATE: OCT. 24TH, 2019

PROJECT NUMBER: 19-419

COPYRIGHT: PATERA LLC.:IT IS UNLAWFUL FOR ANYONE TO USE OR REPRODUCE BY ANY MEANS ALL OR ANY PORTION OF THESE CONSTRUCTION DOCUMENTS WITHOUT THE EXPRESSED WRITTEN PERMISSION OF PATERA LLC.

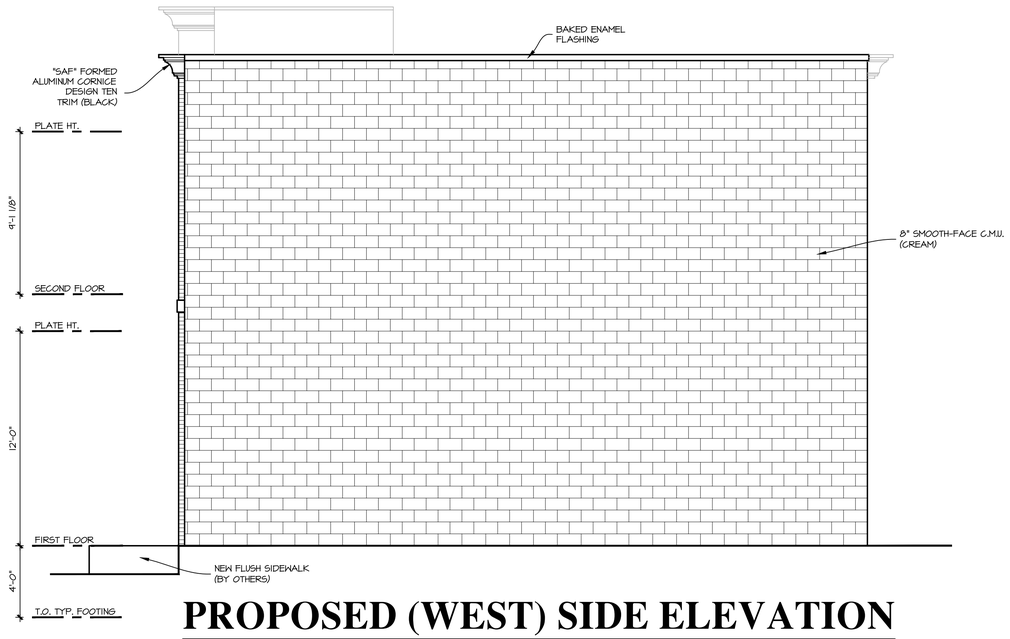

PROPOSED (WEST) SIDE ELEVATION

1/4" = 1'-0"

APPROVED
By Tim Askin - Milwaukee HPC at 1:11 pm, Feb 18, 2021

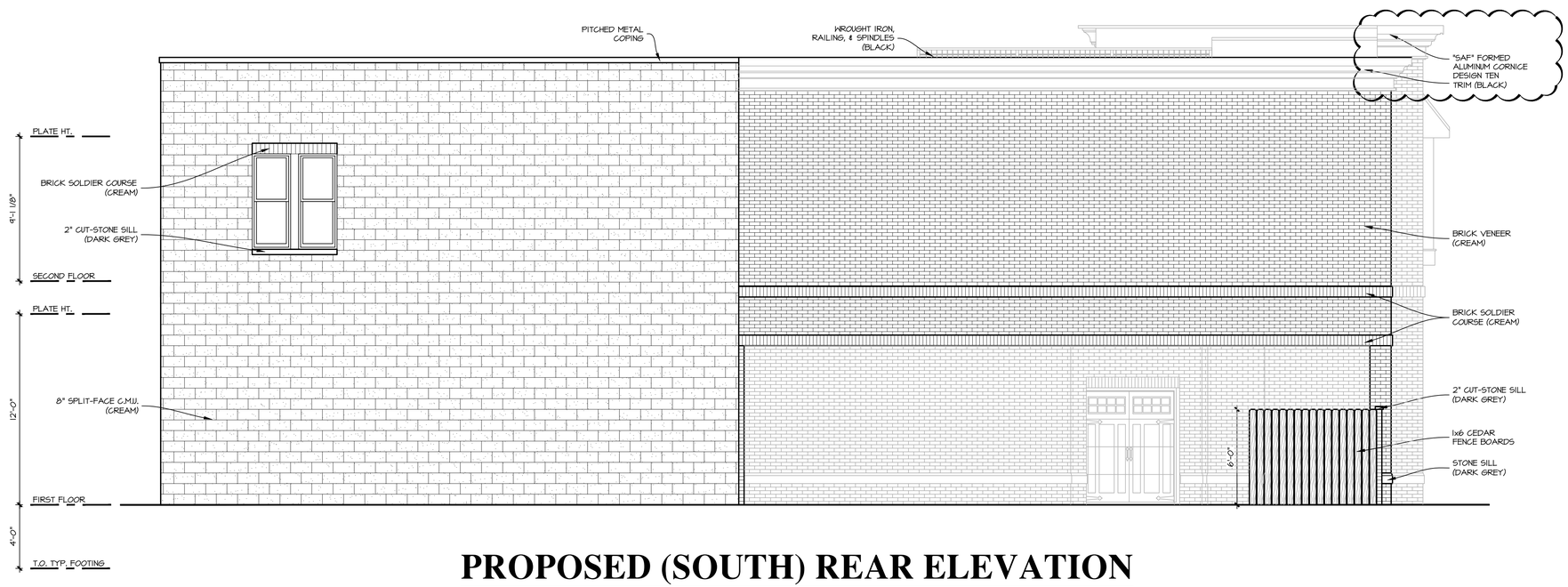

PROPOSED (SOUTH) REAR ELEVATION

1/4" = 1'-0"

PATERA LLC
Excellence in Architecture
2601 S. Sunny Slope Rd. • New Berlin, WI 53151
262-786-6776 FAX 262-786-7036

REVISIONS:
11/26/19: PRELIM #1
12/20/19: PRELIM #2
2/7/20: HPC SUBMITTAL
6/8/20: PROGRESS SET
7/8/20: CD'S ISSUED
8/25/20: REVISED CD'S
9/3/20: REVISED CD'S
11/16/20:SITE PLAN INFO
12/22/20: REVISIONS 1
1/13/21: REVISIONS

BRADY & MARSHALL MIXED USE

BRADY STREET
MILWAUKEE, WI
SHEET TITLE:
PROPOSED ELEVATIONS

A.201

DATE: OCT. 24TH, 2019

PROJECT NUMBER: 19-419

COPYRIGHT: PATERA LLC.:IT IS UNLAWFUL FOR ANYONE TO USE OR REPRODUCE BY ANY MEANS ALL OR ANY PORTION OF THESE CONSTRUCTION DOCUMENTS WITHOUT THE EXPRESSED WRITTEN PERMISSION OF PATERA LLC.

APPROVED
By Tim Askin - Milwaukee HPC at 1:11 pm, Feb 18, 2021

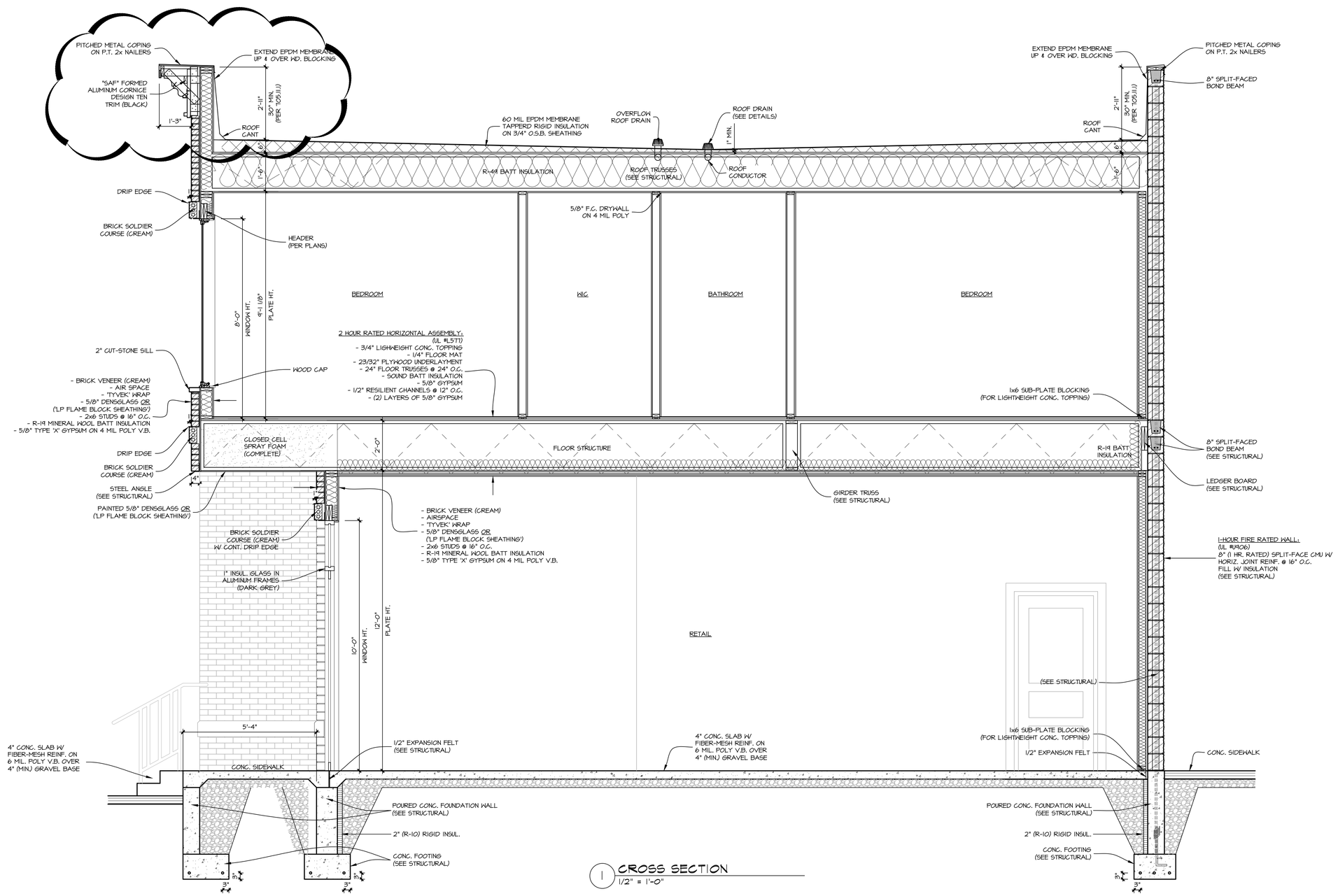

1 CROSS SECTION
1/2" = 1'-0"

PATERA LLC
Excellence in Architecture
2601 S. Sunny Slope Rd. • New Berlin, WI 53151
262-786-6776 FAX 262-786-7036

REVISIONS:
11/26/19: PRELIM #1
12/20/19: PRELIM #2
2/7/20: HPC SUBMITTAL
6/8/20: PROGRESS SET
7/8/20: CD'S ISSUED
8/25/20: REVISED CD'S
9/3/20: REVISED CD'S
11/16/20:SITE PLAN INFO
12/22/20: REVISIONS 1
1/13/21: REVISIONS

BRADY & MARSHALL MIXED USE

BRADY STREET
MILWAUKEE, WI

SHEET TITLE:
PROPOSED SECTIONS & DETAILS

A.300

DATE: OCT. 24TH, 2019

PROJECT NUMBER: 19-419

COPYRIGHT: PATERA LLC...IT IS UNLAWFUL FOR ANYONE TO USE OR REPRODUCE BY ANY MEANS ALL OR ANY PORTION OF THESE CONSTRUCTION DOCUMENTS WITHOUT THE EXPRESSED WRITTEN PERMISSION OF PATERA LLC.

APPROVED
By Tim Askin - Milwaukee HPC at 1:11 pm, Feb 18, 2021

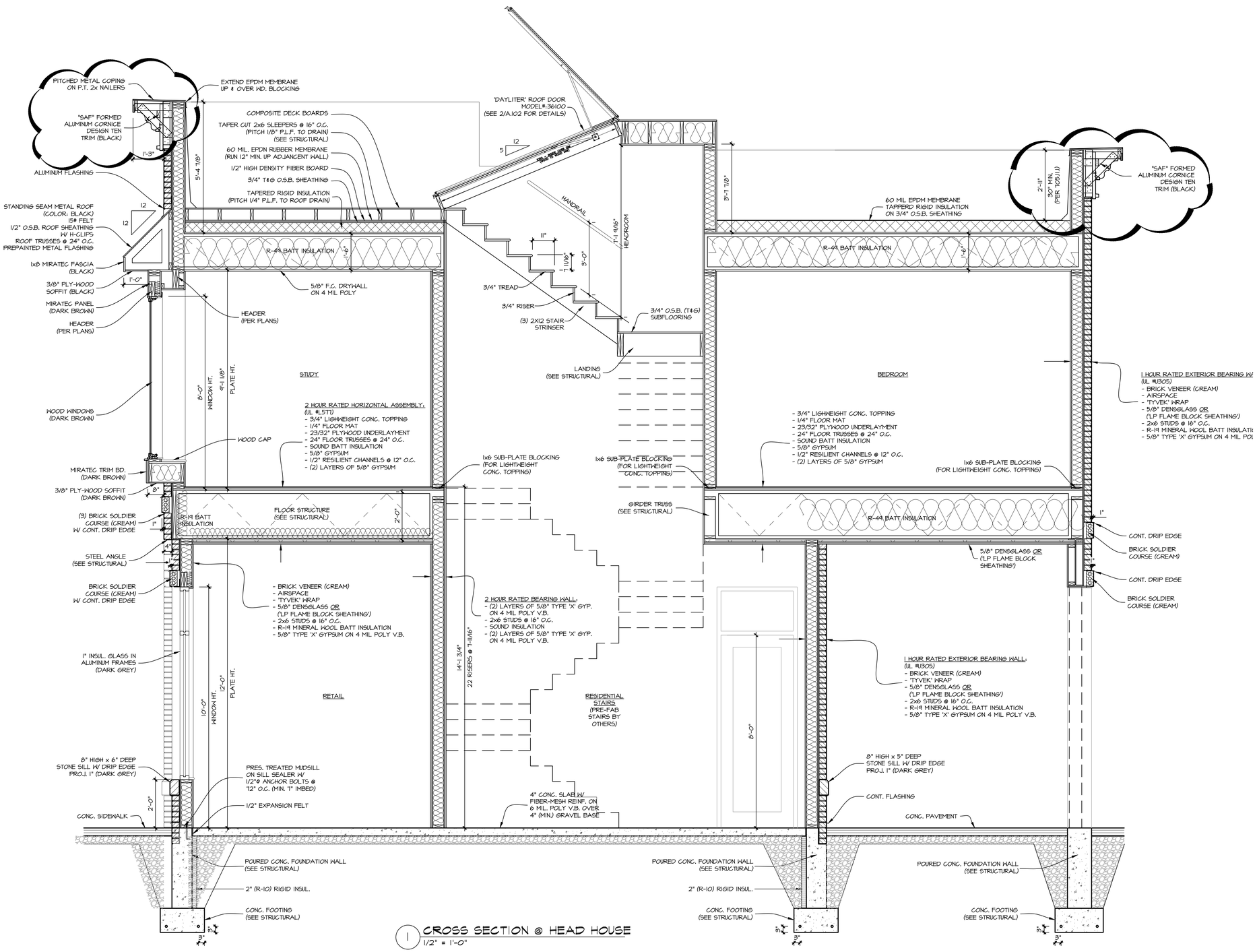

1 CROSS SECTION @ HEAD HOUSE
1/2" = 1'-0"

PATERA LLC
Excellence in Architecture
2601 S. Sunny Slope Rd. • New Berlin, WI 53151
262-786-6776 FAX 262-786-7036

REVISIONS:
11/26/19: PRELIM #1
12/20/19: PRELIM #2
2/7/20: HPC SUBMITTAL
6/8/20: PROGRESS SET
7/8/20: CD'S ISSUED
8/25/20: REVISED CD'S
9/3/20: REVISED CD'S
11/16/20:SITE PLAN INFO
12/22/20: REVISIONS 1
1/13/21: REVISIONS

BRADY & MARSHALL MIXED USE

BRADY STREET
MILWAUKEE, WI

SHEET TITLE:
PROPOSED SECTIONS & DETAILS

A.301

DATE: OCT. 24TH, 2019

PROJECT NUMBER: 19-419

COPYRIGHT: PATERA LLC...IT IS UNLAWFUL FOR ANYONE TO USE OR REPRODUCE BY ANY MEANS ALL OR ANY PORTION OF THESE CONSTRUCTION DOCUMENTS WITHOUT THE EXPRESSED WRITTEN PERMISSION OF PATERA LLC.

APPROVED
By Tim Askin - Milwaukee HPC at 1:11 pm, Feb 18, 2021

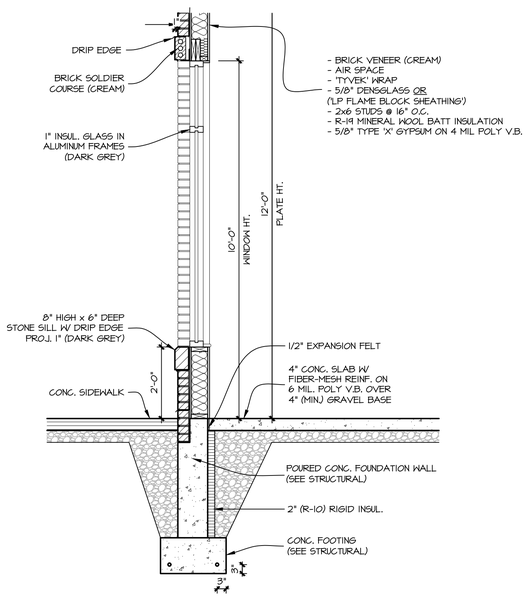

3 PARTIAL WALL SECTION
1/2" = 1'-0"

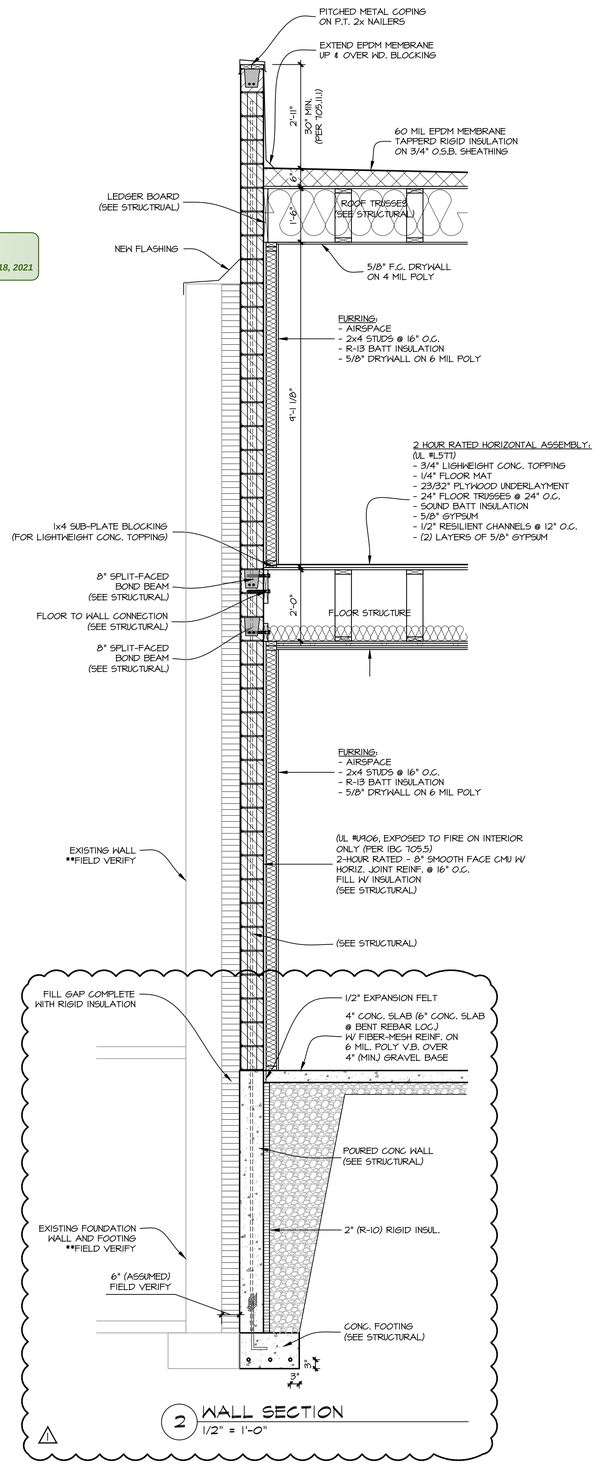

2 WALL SECTION
1/2" = 1'-0"

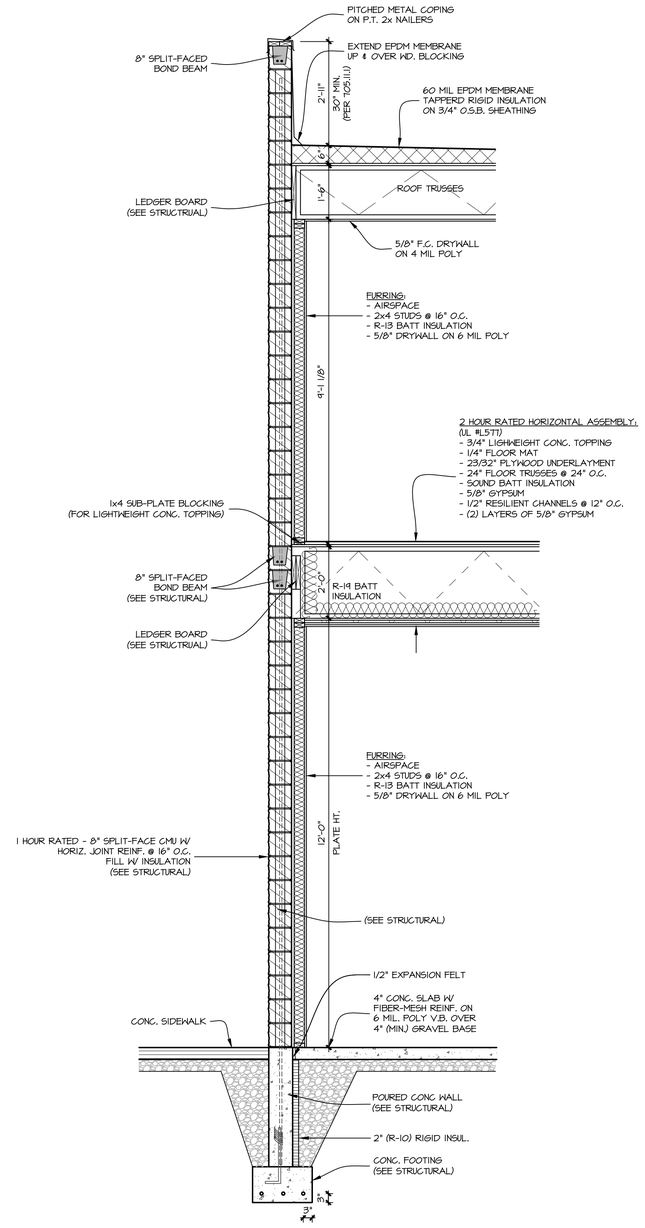

1 WALL SECTION
1/2" = 1'-0"

PATERA LLC
Excellence in Architecture
2601 S. Sunny Slope Rd. • New Berlin, WI 53151
262-786-6776 FAX 262-786-7036

REVISIONS:
11/26/19: PRELIM #1
12/20/19: PRELIM #2
2/7/20: HPC SUBMITTAL
6/8/20: PROGRESS SET
7/8/20: CD'S ISSUED
8/25/20: REVISED CD'S
9/3/20: REVISED CD'S
11/16/20:SITE PLAN INFO
12/22/20: REVISIONS 1
1/13/21: REVISIONS

BRADY & MARSHALL MIXED USE

BRADY STREET
MILWAUKEE, WI
SHEET TITLE:
PROPOSED SECTIONS & DETAILS

A.302

DATE: OCT. 24TH, 2019

PROJECT NUMBER: 19-419

COPYRIGHT: PATERA LLC...IT IS UNLAWFUL FOR ANYONE TO USE OR REPRODUCE BY ANY MEANS ALL OR ANY PORTION OF THESE CONSTRUCTION DOCUMENTS WITHOUT THE EXPRESSED WRITTEN PERMISSION OF PATERA LLC.

APPROVED
By Tim Askin - Milwaukee HPC at 1:11 pm, Feb 18, 2021

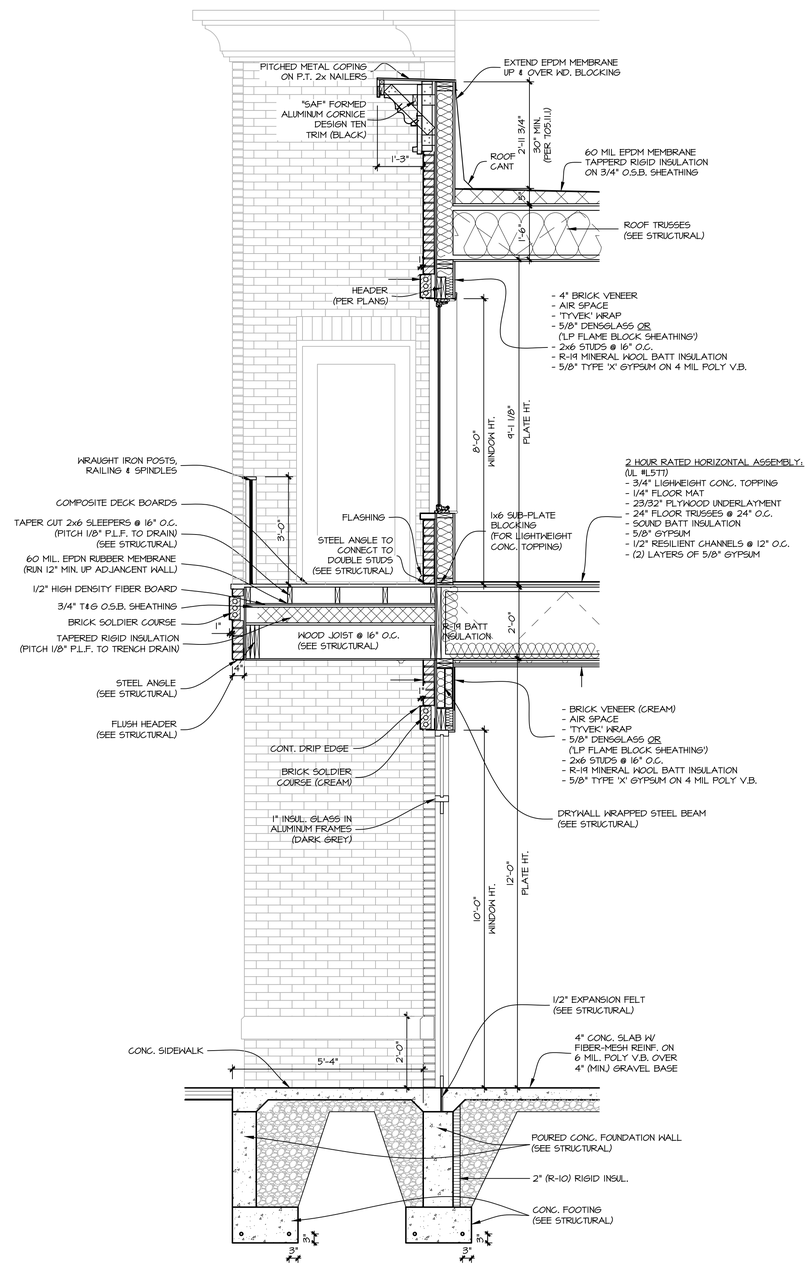

1 WALL SECTION
1/2" = 1'-0"

PATERA LLC
Excellence in Architecture
2601 S. Sunny Slope Rd. • New Berlin, WI 53151
262-786-6776 FAX 262-786-7036

REVISIONS:
11/26/19: PRELIM #1
12/20/19: PRELIM #2
2/7/20: HPC SUBMITTAL
6/8/20: PROGRESS SET
7/8/20: CD'S ISSUED
8/25/20: REVISED CD'S
9/3/20: REVISED CD'S
11/16/20:SITE PLAN INFO
12/22/20: REVISIONS 1
1/13/21: REVISIONS

LIMITED USE

BRADY & MARSHALL MIXED

BRADY STREET
MILWAUKEE, WI
SHEET TITLE:
PROPOSED SECTION & STOREFRONT WINDOWS

A.303

DATE: OCT. 24TH, 2019

PROJECT NUMBER: 19-419

COPYRIGHT: PATERA LLC...IT IS UNLAWFUL FOR ANYONE TO USE OR REPRODUCE BY ANY MEANS ALL OR ANY PORTION OF THESE CONSTRUCTION DOCUMENTS WITHOUT THE EXPRESSED WRITTEN PERMISSION OF PATERA LLC.

APPROVED
By Tim Askin - Milwaukee HPC at 1:11 pm, Feb 18, 2021

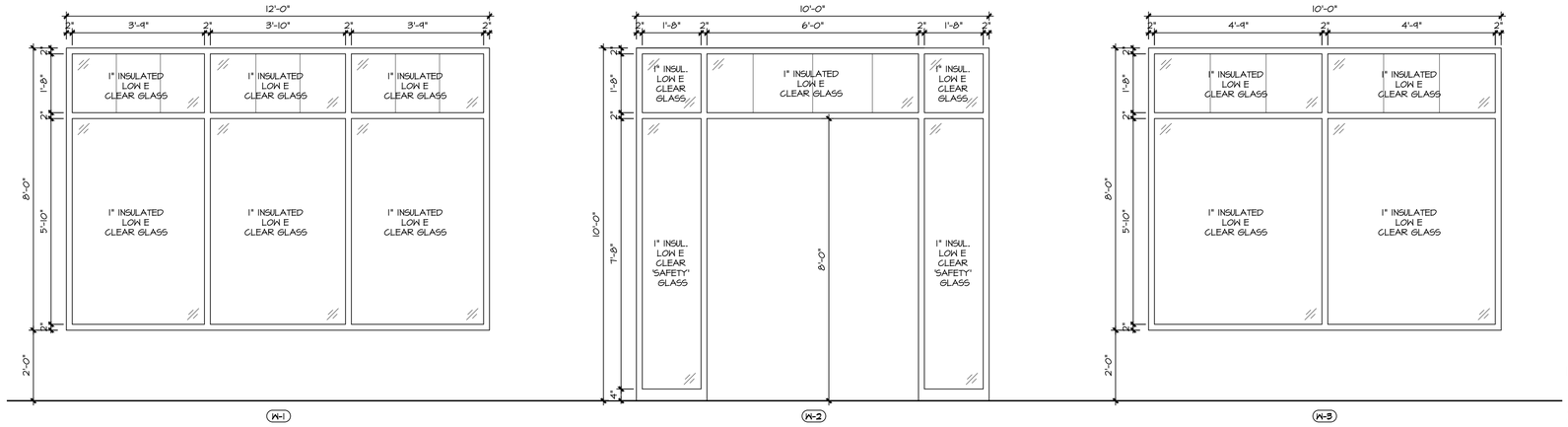

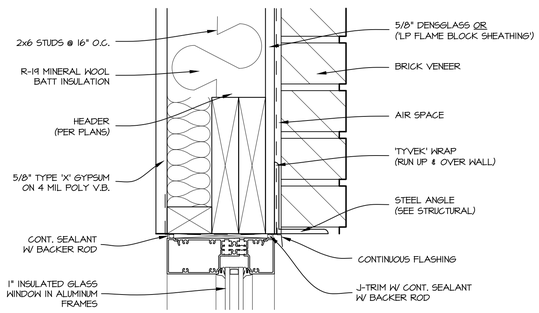

WINDOW HEAD DETAIL
3" = 1'-0"

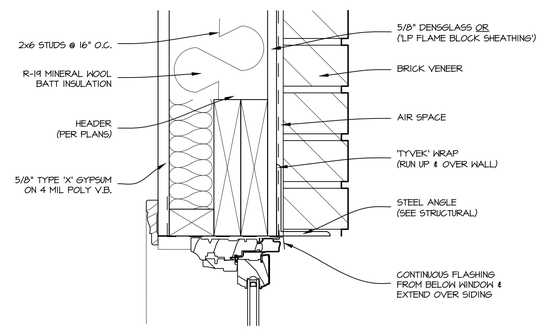

WINDOW HEAD DETAIL
3" = 1'-0"

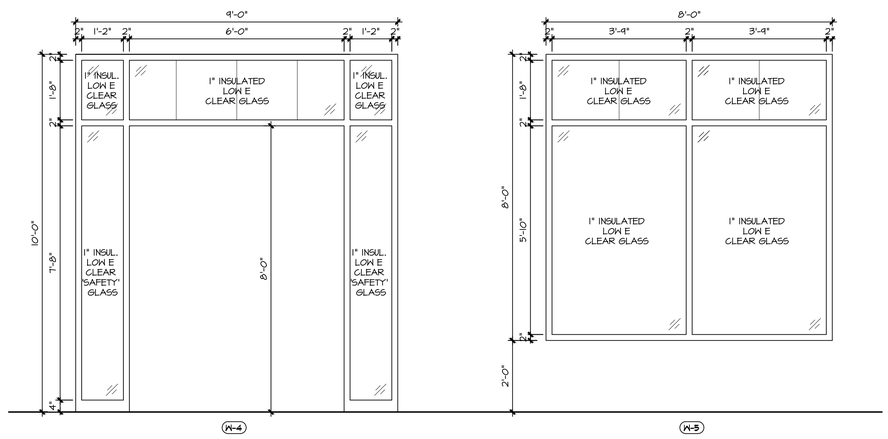

STOREFRONT WINDOWS
1/2" = 1'-0"

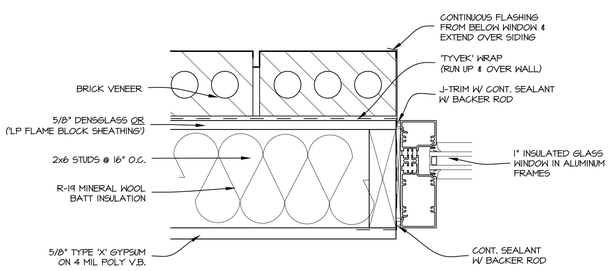

WINDOW JAMB DETAIL
3" = 1'-0"

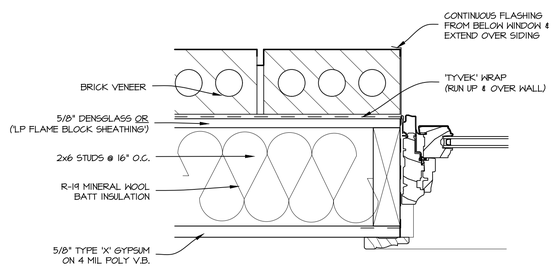

WINDOW JAMB DETAIL
3" = 1'-0"

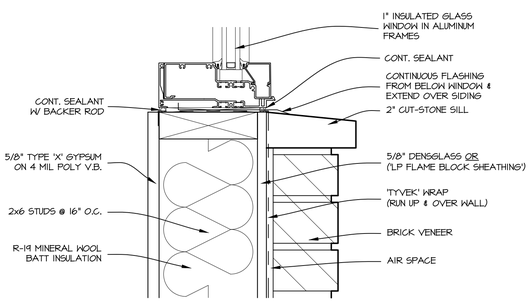

WINDOW SILL DETAIL
3" = 1'-0"

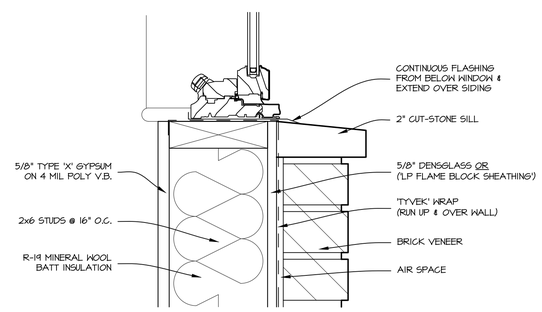

WINDOW SILL DETAIL
3" = 1'-0"

PATERA LLC
Excellence in Architecture
2601 S. Sunny Slope Rd. • New Berlin, WI 53151
262-786-6776 FAX 262-786-7036

REVISIONS:
11/26/19: PRELIM #1
12/20/19: PRELIM #2
2/7/20: HPC SUBMITTAL
6/8/20: PROGRESS SET
7/8/20: CD'S ISSUED
8/25/20: REVISED CD'S
9/3/20: REVISED CD'S
11/16/20:SITE PLAN INFO
12/22/20: REVISIONS 1
1/13/21: REVISIONS

BRADY & MARSHALL MIXED USE

BRADY STREET
MILWAUKEE, WI

SHEET TITLE:
PROPOSED STOREFRONT WINDOWS & HEAD,SILL & JAMB DETAILS

A.304

DATE: OCT. 24TH, 2019

PROJECT NUMBER: 19-419

COPYRIGHT: PATERA LLC...IT IS UNLAWFUL FOR ANYONE TO USE OR REPRODUCE BY ANY MEANS ALL OR ANY PORTION OF THESE CONSTRUCTION DOCUMENTS WITHOUT THE EXPRESSED WRITTEN PERMISSION OF PATERA LLC.

APPROVED
By Tim Askin - Milwaukee HPC at 1:10 pm, Feb 18, 2021

DESIGN CODE:

WISCONSIN COMMERCIAL BUILDING CODE & THE ADOPTED INTERNATIONAL BUILDING CODE

BUILDING DESIGN LIVE LOADS/CRITERIA:

OCCUPANT LIVE LOADS:

- ROOF	
DECK (SAME AS OCCUPANCY SERVED)	40 PSF
ORDINARY FLAT ROOF	20 PSF
- SECOND FLOOR FRAMING (RESIDENTIAL)	40 PSF
- STORES	
RETAIL	
FIRST FLOOR	
UNIFORM LOADING	100 PSF
CONCENTRATED LOADING	1,000 lbs.

HANDRAILS & GUARDS (NON-GLASS):

- SINGLE CONCENTRATED LOAD APPLIED IN ANY DIRECTION @ ANY LOCATION.	200 lbs.
- LINEAR APPLIED LOAD @ ANY LOCATION OR TOP RAIL.	50 PLF
- DISTRIBUTED LOAD OVER A 12 INCH BY 12 INCH AREA LOCATE ANYWHERE EXCEPT THE HANDRAIL OR TOP RAIL.	50 lbs.

GRAB BARS, SHOWER SEATS & DRESSING ROOM BENCH SEATS:

- SINGLE CONCENTRATED LOAD APPLIED IN ANY DIRECTION @ ANY LOCATION.	250 lbs.

VEHICLE BARRIERS:

- FOR EVERY 10 FT OF LADDER HEIGHT.	300 lbs.
- IN ADDITION TO THE 10 FT. LADDER SECTION REQUIREMENT, A SINGLE CONCENTRATED LOAD APPLIED IN ANY DIRECTION @ ANY LOCATION.	300 lbs.
- THE TOP OF EACH RAILING EXTENSION ABOVE THE TERMINATION SURFACE.	100 lbs.

INTERIOR WALLS & PARTITIONS:

- WALLS & PARTITIONS 6 FT. & GREATER, UNIFORM HORIZONTAL LOAD OF.	5 PSF

ROOF SNOWLOAD DESIGN INFORMATION:

- GROUND SNOW LOAD (pg)	30 PSF
- TERRAIN CATEGORY	B
- EXPOSURE CONDITION	PARTIALLY EXPOSED
- EXPOSURE FACTOR (Ce)	1.0
- THERMAL FACTOR (Ct)	1.0
- FLAT ROOF SNOW LOAD (pf)	21.0 PSF

* SEE DRIFTED SNOW LOAD DIAGRAMS FOR ADDITIONAL LOADING INFORMATION *

WIND LOAD DESIGN INFORMATION:

- BASIC WIND SPEED	115 mph
- RISK CATEGORY	II
- VELOCITY PRESSURE COEFFICIENT (Kd)	0.85
- EXPOSURE CATEGORY	B
- ENCLOSURE CLASSIFICATION	ENCLOSED BUILDING
- INTERNAL PRESSURE COEFFICIENT (GCpi)	±0.18
- GUST EFFECT FACTOR	0.85
- TOPOGRAPHIC FACTOR (Kzt)	1.0

* SEE WIND LOADING DIAGRAMS FOR MWFRS & COMPONENTS & CLADDING PRESSURES *

SEISMIC DESIGN INFORMATION:

- RISK CATEGORY	II
- SITE CLASS (ASSUMED)	D
- Ss	0.086
- S1	0.046
- Sms	0.138
- Sm1	0.111
- Sds	0.092
- Sd1	0.074
- SEISMIC DESIGN CATEGORY	B

SOIL LATERAL LOADS (ASSUMED, TO BE VERIFIED):

- AT-REST PRESSURE	65 PSF/F
- ACTIVE PRESSURE	55 PSF/F
- PASSIVE PRESSURE	250 PSF/F

MATERIAL STRENGTHS:

CONCRETE:	(COMPRESSIVE STRENGTH @ 28 DAYS)
- SLAB ON GRADE	f'c = 4,000 PSI
- FOOTINGS & ISOLATED PADS	f'c = 3,000 PSI
- FOUNDATION WALLS	f'c = 3,000 PSI
REINFORCING STEEL:	
- BILLET A615 GRADE 60	Fy = 60,000 PSI
STRUCTURAL STEEL:	
- ROLLED "WIDE FLANGE" SHAPES	A992
- TUBE SHAPES "HOLLOW STRUCTURAL SECTION"	A500 GR. B
- ALL OTHER ROLLED SHAPES & PLATES	A36
STRUCTURAL BOLTS:	
- ANCHOR BOLTS (HOT-DIP GALV.)	A325
- THROUGH BOLT CONNECTIONS	A325
- THREADED RODS	A36
WELDED CONNECTIONS:	
- WELDING ELECTRODES	E70xx (70 KSI)

MASONRY MORTAR:
- TYPE "M" MORTAR BELOW GRADE
- TYPE "M" OR "S" ABOVE GRADE

WOOD FRAMING:

- 2X8, 2X10 & 2X12 MEMBERS TO BE DOUGLAS-FIR LARCH #2 (NORTH)
APPLIES TO PRESSURE TREATED MEMBERS AS WELL.

Fb (BENDING)	850 PSI
Fv (SHEAR)	180 PSI
Fcp (COMP. PERP. TO GRAIN)	625 PSI
Fc (COMP. PARA. TO GRAIN)	1,400 PSI
Ft (TENSION PARA. TO GRAIN)	500 PSI
E (MODULUS OF ELASTICITY)	1,600,000 PSI

- 2X4 & 2X6 MEMBERS TO BE SPRUCE-PINE-FIR #2:

Fb (BENDING)	875 PSI
Fv (SHEAR)	135 PSI
Fcp (COMP. PERP. TO GRAIN)	425 PSI
Fc (COMP. PARA. TO GRAIN)	1,150 PSI
Ft (TENSION PARA. TO GRAIN)	450 PSI
E (MODULUS OF ELASTICITY)	1,400,000 PSI

- LAMINATED-VENEER LUMBER (LVL), ROSEBURG MANUFACTURE:

Fb (BENDING)	3,100 PSI
Fv (SHEAR)	290 PSI
Fcp (COMP. PERP. TO GRAIN, EDGEWISE)	750 PSI
Fc (COMP. PARA. TO GRAIN)	3,000 PSI
Ft (TENSION PARA. TO GRAIN)	2,100 PSI
E (MODULUS OF ELASTICITY)	2,000,000 PSI

SOIL BEARING (PER GEO-TECHNICAL ENGINEER'S REPORT):

- ALLOWABLE BEARING PRESSURE	2,000 PSF (ASSUMED)
GEO-TECH. REPORT	

FOUNDATION & EARTHWORK:

1. ALL EXTERIOR FOOTINGS MUST BEAR AT A MINIMUM DEPTH OF 4'-0" BELOW ADJACENT FINISH EXTERIOR GRADE.
2. DO NOT PLACE ANY FOOTINGS ON FROZEN SUBGRADE.
3. BACK FILLING SHALL BE DONE SIMULTANEOUSLY ON BOTH SIDES OF FOUNDATION WALLS.
4. DO NOT PLACE BACK FILL AGAINST BASEMENT WALLS UNTIL THE TOP AND BOTTOM OF THE WALL ARE ADEQUATELY BRACED BY THE SLAB ON GRADE AND THE FLOOR FRAMING AT THE TOP OF THE WALL.
5. REMOVE ANY EXISTING CONCRETE 2'-0" BELOW NEW CONCRETE FOOTINGS AND SLABS ON GRADE.
6. SHORING/OR UNDERPINNING SHALL BE DESIGNED TO LIMIT HORIZONTAL AND VERTICAL MOVEMENT OF EXISTING CONSTRUCTION TO 1/4" MAXIMUM IN ANY DIRECTION.
7. CENTER PIER AND COLUMN FOOTINGS ON COLUMN CENTERLINES AND WALL FOOTINGS ON WALL CENTERLINES UNLESS SPECIFICALLY NOTED OTHERWISE.
8. ALL BACK FILL WITHIN 3'-0" OF RETAINING WALLS AND BASEMENT WALLS SHALL BE FREE DRAINING GRANULAR MATERIAL APPROVED BY A SOILS ENGINEER AND COMPACTED TO 90% STANDARD PROCTOR.
9. TOP OF FOOTING ELEVATIONS SHOWN ON THESE CONSTRUCTION DOCUMENTS REPRESENT MINIMUM FOOTING DEPTHS FOR FROST PROTECTION AND BEST JUDGMENT OF A SUITABLE BEARING STRATUM. ACTUAL GRADE CONDITIONS AND SUITABLE BEARING STRATUM MUST BE VERIFIED BY THE CONTRACTOR AND A SOILS ENGINEER AT THE TIME OF EXCAVATION.
10. FOOTING EXCAVATIONS MUST EXTEND TO COMPETENT BEARING MATERIAL. CONTRACTOR SHALL HIRE A SOILS ENGINEER TO FIELD VERIFY NET ALLOWABLE SOIL BEARING CAPACITY STATED ON THESE CONSTRUCTION DOCUMENTS AND IN GEOTECHNICAL REPORT FOR THIS PROJECT. IF SUITABLE BEARING STRATUM DOES NOT EXIST AT FOOTING ELEVATIONS STATED ON CONSTRUCTION DOCUMENTS, EXCAVATIONS SHALL BE EXTENDED UNTIL SOIL WITH STATED BEARING CAPACITY IS REACHED. PLACE COMPACTED FILL BELOW FOOTINGS OR EXTEND FOOTINGS DOWN TO SUITABLE BEARING STRATUM. ENGINEERED FILL BELOW SLABS ON GRADE AND FOOTINGS SHALL BE FREE DRAINING GRANULAR MATERIAL COMPACTED TO 95% MODIFIED PROCTOR AND PLACED PER THE SOIL ENGINEERS RECOMMENDATIONS.
11. REFER TO SOILS REPORT (IF APPLICABLE) FOR DESCRIPTION OF EXISTING SOIL CONDITIONS AND RECOMMENDATIONS.
12. WHERE NEW FOOTINGS ABUT EXISTING FOOTINGS, STEP THE NEW FOOTING AS REQUIRED TO HAVE NEW BOTT/FTG ELEVATION MATCH EXISTING BOTT/FTG ELEVATION. CONTRACTOR SHALL FIELD VERIFY EXISTING BOTT/FTG ELEVATION.

CAST-IN-PLACE REINFORCED CONCRETE:

1. CONCRETE WORK SHALL CONFORM TO ACI 318-08 (BUILDING CODE REQUIREMENTS FOR STRUCTURAL CONCRETE).
2. CONTRACTOR SHALL SUBMIT A SET OF STEEL REBAR SHOP DRAWINGS FOR APPROVAL PRIOR TO CONSTRUCTION. CONTRACTOR SHALL REVIEW AND STAMP ALL SHOP DRAWINGS BEFORE SUBMITTING TO THE ARCHITECT.
3. MAXIMUM WATER/CEMENT RATIO FOR CONCRETE SHALL BE AS FOLLOWS:
   - 0.41 FOR SLABS ON GRADE
   - 0.54 FOR CONCRETE BELOW GRADE
   - 0.42 FOR EXPOSED CONCRETE
4. CONCRETE EXPOSED TO EXTERIOR CONDITIONS SHALL BE AIR-ENTRAINED 4%-6%.
5. GROUT BELOW BASE PLATES AND BEARING PLATES SHALL BE NON-SHRINK, NON-METALLIC GROUT 3/4" THICK MINIMUM.
6. STEEL REINFORCING BARS SHALL CONFORM TO ASTM A615 (GRADE 60). DEFORMED WELDED WIRE FABRIC SHALL CONFORM TO ASTM A185.
7. CONTRACTOR SHALL PROVIDE SUITABLE WIRE SPACERS, CHAIRS, TIES, ETC FOR SUPPORTING REINFORCING STEEL IN THE PROPER POSITION WHILE PLACING CONCRETE.
8. PROVIDE (2)-#5 BARS AROUND ALL OPENINGS AND (2)-#5 BARS DIAGONALLY AT ALL OPENING CORNERS. EXTEND BARS 2'-6" PAST OPENING.
9. PROVIDE 1/2" EXPANSION JOINT MATERIAL AT INTERIOR LOCATIONS WHERE SLABS ABUT WALLS, COLUMNS, AND OTHER VERTICAL SURFACES UNLESS NOTED OTHERWISE.
10. PROVIDE A 1" CHAMFER ON EXPOSED CORNERS OF CONCRETE UNLESS NOTED OTHERWISE.
11. DO NOT PLACE CONDUITS, PIPES, DUCTS, OR FIXTURES IN STRUCTURAL CONCRETE UNLESS NOTED OTHERWISE.
12. SLEEVES, CONDUITS, OR PIPING PASSING THROUGH CONCRETE SLABS AND WALLS SHALL BE PLACED SO THAT THEY ARE NOT CLOSER THAN THREE DIAMETERS ON CENTER AND SO THAT THEY DO NOT DISPLACE REINFORCING.
13. PROVIDE SAW CUT CONTROL JOINTS IN CONCRETE SLABS ON METAL DECK SPACED NO MORE THAN 20'-0" APART. PLACE CONTROL JOINTS ON COLUMN CENTER LINES IN EACH DIRECTION. REFER TO CONTROL JOINT LAYOUT SHOWN ON FOUNDATION PLAN FOR REFERENCE.
14. CONTRACTOR SHALL BE RESPONSIBLE FOR REPAIR OF ANY IRREGULARITIES OR DEFECTS IN CONCRETE SLABS (CRACKS, BUMPS, FLOOR CURLING, ETC.) BEFORE ANY FLOOR FINISHES ARE APPLIED.
15. REFER TO REINFORCEMENT DEVELOPMENT AND LAP SPLICE SCHEDULE FOR LAP SPLICES IN REINFORCING STEEL.
16. ALL LAPS IN REINFORCING STEEL SHALL BE CLASS "B" LAP SPLICES UNLESS OTHERWISE NOTED.
17. CONCRETE TEST REPORTS SHALL DIRECTLY STATE WHETHER OR NOT THE TEST RESULT COMPLIES WITH THE CONSTRUCTION DOCUMENTS AND SPECIFICATIONS.
18. MAXIMUM SLUMP FOR ALL CONCRETE SHALL NOT EXCEED 4".
19. CLASS C FLY ASH OR SLAG MAY BE SUBSTITUTED FOR CEMENT ON A POUND TO POUND BASIS UP TO 10% OF THE TOTAL CEMENTITIOUS CONTENT.
20. ALL CONCRETE SLABS SHALL BE WET CURED PER ACI RECOMMENDATIONS FOR NO LESS THAN SEVEN DAYS.
21. CALCIUM CHLORIDE OR ADMIXTURES CONTAINING CALCIUM CHLORIDE ARE NOT PERMITTED IN ANY CONCRETE MIX.
22. PROVIDE THE FOLLOWING CLEAR COVER DISTANCES FOR REINFORCEMENT IN CONCRETE (UNLESS OTHERWISE NOTED):

FOOTINGS - ALL SIDES	3"
SLABS NOT PERMANENTLY AGAINST EARTH - BOTTOM & SIDES	1"
SLABS PERMANENTLY AGAINST EARTH - BOTTOM & SIDES	3"
SLABS - TOP	3/4"
WALLS NOT PERMANENTLY AGAINST EARTH	1"
WALLS PERMANENTLY AGAINST EARTH	3"
BEAMS & GIRDERS NOT PERMANENTLY AGAINST EARTH	1 1/2"
BEAMS & GIRDERS NOT PERMANENTLY AGAINST EARTH	1 1/2"
PIERS & COLUMNS NOT PERMANENTLY AGAINST EARTH	2"

23. CONTRACTOR SHALL USE SMOOTH FORMS FOR EXPOSED CONCRETE SURFACES. ANY CONCRETE SURFACE REPAIRS SHALL BE PERFORMED BY THE CONTRACTOR AS REQUIRED. REPAIR AND PATCH DEFECTIVE AREAS WITH PROPRIETARY PATCHING COMPOUND IMMEDIATELY AFTER REMOVAL OF FORMS.

MASONRY:

1. MASONRY CONSTRUCTION SHALL CONFORM TO THE CURRENT EDITION OF "BUILDING CODE REQUIREMENTS FOR MASONRY STRUCTURES" ACI AND "SPECIFICATION FOR MASONRY STRUCTURES" ACI.
2. PROVIDE VERTICAL WALL CONTROL JOINTS IN MASONRY WALLS AS FOLLOWS:
   - 4'-0" MAXIMUM FROM CORNER OF WALLS
   - 40'-0" O.C. MAXIMUM
   - AT CHANGES IN WALL HEIGHT AND THICKNESS
   - AT WALLS ABUTTING COLUMNS
3. REFER TO ARCHITECTURAL & STRUCTURAL DRAWINGS FOR LOCATION OF ALL VERTICAL CONTROL JOINTS IN EXTERIOR WALLS.
4. ALL MASONRY (BOND BEAMS, PILASTERS, LINTELS) SHALL BE GROUTED SOLID WITH CONCRETE HAVING F'c=3000 PSI UNLESS NOTED OTHERWISE. COARSE AGGREGATE SHALL BE PEA GRAVEL.
5. LAP VERTICAL WALL REINFORCEMENT A MINIMUM OF 36" UNLESS OTHERWISE NOTED.
6. CONTRACTOR SHALL GROUT MASONRY SOLID AT ALL ANCHOR BOLT LOCATIONS.
7. ALL MASONRY WALLS SHALL BE CONSTRUCTED IN A RUNNING BOND PATTERN AS DESCRIBED BY ACI 530 CURRENT ADDITION UNLESS OTHERWISE NOTED ON THE CONSTRUCTION DOCUMENTS.

STRUCTURAL STEEL:

1. DESIGN, FABRICATION, AND ERECTION SHALL CONFORM TO THE CURRENT EDITION OF AISC (AMERICAN INSTITUTE OF STEEL CONSTRUCTION) "MANUAL OF STEEL CONSTRUCTION".
2. STEEL DETAILING AND CONNECTIONS SHALL CONFORM TO THE REQUIREMENTS OF THE CURRENT EDITION OF AISC "SPECIFICATIONS FOR STRUCTURAL STEEL BUILDINGS, ALLOWABLE STRESS DESIGN AND PLASTIC DESIGN".
3. WELDING SHALL BE PERFORMED BY CERTIFIED WELDERS HOLDING CURRENT AWS CERTIFICATES IN THE TYPES OF WELDING SPECIFIED ON THESE CONSTRUCTION DOCUMENTS.
4. CONTRACTOR SHALL SUBMIT FIVE SETS OF STEEL SHOP DRAWINGS FOR APPROVAL PRIOR TO FABRICATION. CONTRACTOR SHALL REVIEW AND STAMP ALL SHOP DRAWINGS BEFORE SUBMITTING TO THE STRUCTURAL DESIGNER OF RECORD.
5. CONTRACTOR SHALL DESIGN AND PROVIDE ANY TEMPORARY BRACING OR GUYS REQUIRED TO ERECT STEEL MEMBERS. TEMPORARY BRACING SHALL BE LEFT IN PLACE UNTIL THE PERMANENT STRUCTURE IS IN PLACE AND SECURE.
6. PROVIDE 3/16" CAP PLATE AT THE ENDS OF ALL EXPOSED TUBE AND PIPE MEMBERS.
7. STAIRS, HANDRAILS, AND GUARDRAILS SHALL BE DESIGNED BY THE STEEL SUPPLIER OR ARCHITECT OR RECORD, VERIFY ROLES AND RESPONSIBILITY.
8. ALL STEEL BEAMS SHALL BE FABRICATED WITH THE NATURAL CAMBER (WITHIN MILL TOLERANCE).
9. THE STEEL SUPPLIER SHALL COORDINATE HIS WORK WITH THE STEEL JOIST SUPPLIER ON THE PROJECT (IF APPLICABLE, SEE CONSTRUCTION DOCUMENTS).
10. CAPACITY OF BOLTED OR WELDED CONNECTIONS SHALL BE EQUAL TO OR EXCEED 120% OF BEAM REACTION PRODUCED BY MAXIMUM ALLOWABLE UNIFORM LOAD ON THE GIVEN MEMBER SPAN.
11. UNLESS OTHERWISE NOTED ON CONSTRUCTION DOCUMENTS, ALL BEAM CONNECTIONS SHALL BE DOUBLE ANGLE CONNECTIONS WITH A325 BOLTS. AT BEAM TO BEAM AND BEAM TO COLUMN CONNECTIONS, PROVIDE AS MANY BOLTS AS POSSIBLE IN BEAM FLANGE. DOUBLE ANGLE WELDED CONNECTIONS MAY BE USED TO DEVELOP THE SAME CAPACITY AS A BOLTED CONNECTION.
12. ALTERNATE CONNECTIONS FROM WHAT IS SPECIFIED ON THE CONSTRUCTION DOCUMENTS WILL NOT BE ACCEPTED WITHOUT WRITTEN APPROVAL FROM THE STRUCTURAL DESINGER OF RECORD.
13. USE STANDARD AISC DOUBLE ANGLE CONNECTIONS WHERE POSSIBLE. ALL STANDARD DOUBLE ANGLE CONNECTIONS SHALL BE IN ACCORDANCE WITH ASD CURRENT EDITION AND SHALL BE TYPE 2 FRAMING CONNECTIONS UNLESS NOTED OTHERWISE.
14. WHERE WOOD MEMBERS FRAME INTO STEEL MEMBERS, PROVIDE A SADDLE CONNECTION. SEE CONSTRUCTION DOCUMENTS AND/ OR VERIFY CONNECTION WITH STRUCTURAL DESIGNER OF RECORD.
15. PROVIDE STIFFENER PLATES ON BOTH SIDES OF BEAM WEBS AT ALL CONCENTRATED LOADS ABOVE AND BELOW A BEAM. UNLESS NOTED OTHERWISE, FRAME THE LARGEST BEAM OVER COLUMNS AT BEAM TO BEAM INTERSECTIONS.

WOOD FRAMING:

1. DESIGN, FABRICATION, AND CONSTRUCTION SHALL CONFORM TO THE CURRENT EDITION OF "NATIONAL DESIGN SPECIFICATION FOR WOOD CONSTRUCTION", AMERICAN FOREST AND PAPER ASSOCIATION.
2. DESIGN, FABRICATION, AND CONSTRUCTION OF ALL PLYWOOD/ O.S.B. FRAMING SHALL CONFORM TO THE CURRENT EDITION OF "PLYWOOD DESIGN SPECIFICATIONS", AMERICAN PLYWOOD ASSOCIATION.
3. PLYWOOD/ O.S.B. SHEATHING SHALL CONFORM TO THE CURRENT EDITION OF "U.S. PRODUCT STANDARD PS-1" FOR SOFTWOOD PLYWOOD/ O.S.B. AND BEAR THE APA GRADE-TRADEMARK OF THE AMERICAN PLYWOOD ASSOCIATION.
4. PLYWOOD/ O.S.B. SHEATHING SHALL BE ATTACHED TO WOOD FRAMING WITH "STRENGTH AXIS PARALLEL TO FLOOR. STAGGER ALL JOINTS.
5. PLYWOOD/ O.S.B. SHEATHING SHALL BE FASTENED TO SUPPORTS w/ 8d NAILS SPACED AT 6" O.C. AT PANEL EDGES AND 12" O.C. AT INTERMEDIATE SUPPORTS UNLESS NOTED OTHERWISE.
6. ANY PLYWOOD/ O.S.B. SHEATHING THAT IS EXPOSED TO MOISTURE SHALL BE PRESSURE TREATED.
7. PLYWOOD/ O.S.B. PANEL EDGES SHALL BEAR ON THE FRAMING SUPPORT MEMBERS AND BUTT ALONG THEIR CENTER LINES. NAILS SHALL BE PLACED NOT LESS THAN 3/8" IN FROM THE PANEL EDGE.
8. WOOD SILL PLATES AND OTHER WOOD MEMBERS DIRECTLY EXPOSED TO MOISTURE OR IN DIRECT CONTACT WITH CONCRETE OR MASONRY SHALL BE PRESSURE TREATED.
9. MAXIMUM MOISTURE CONTENT IN ANY WOOD MEMBER SHALL NOT EXCEED 19%.
10. 2x WOOD JOISTS SHALL HAVE 1x3 SPF NO.2 CROSS BRIDGING AT 8'-0" o/c MAXIMUM.
11. DO NOT EMBED NON-PRESSURE TREATED WOOD MEMBERS IN CONCRETE.
12. ALL BOLTS AND LAG SCREWS SHALL CONFORM TO ASTM. USE STEEL WASHERS BETWEEN HEAD OF BOLT OR LAG SCREW AND WOOD. USE STEEL WASHERS BETWEEN NUT AND WOOD. VERIFY GALVANIC REACTION CONDITIONS AND REQUIREMENTS
13. ALL FASTENERS ATTACHING PRESSURE TREATED WOOD MEMBERS TO CONCRETE OR MASONRY SHALL BE HOT DIPPED GALVANIZED OR STAINLESS STEEL.
14. MAKE NO SUBSTITUTIONS OF ANY ENGINEERED WOOD PRODUCTS (LVL, PSL, LSL, ETC.) SPECIFIED ON ANY FRAMING PLANS WITH OUT THE DIRECT WRITTEN PERMISSION OF THE STRUCTURAL DESIGNER OF RECORD.

METAL PLATE CONNECTED WOOD TRUSS NOTES/CRITERIA:

1. WOOD TRUSSES SHALL BE DESIGNED IN ACCORDANCE WITH THE CURRENT EDITIONS OF "DESIGN SPECIFICATIONS FOR METAL PLATE CONNECTED WOOD TRUSSES" BY TRUSS PLATE INSTITUTE (TPI) AND "NATIONAL DESIGN SPECIFICATIONS FOR STRESS-GRADE LUMBER AND ITS FASTENINGS" BY NATIONAL FOREST PRODUCTS ASSOCIATION.
2. ROOF TRUSSES SHALL BE DESIGNED FOR THE FOLLOWING LOADS:
   TOP CHORD LIVE LOAD ..... SEE DRIFTED SNOW PLAN
   TOP CHORD DEAD LOAD ..... 15 PSF
   BOTTOM CHORD LIVE LOAD ..... N/A (VERIFY NON-STORAGE LOAD)
   BOTTOM CHORD DEAD LOAD ..... 10 PSF
3. FLOOR TRUSSES SHALL BE DESIGNED FOR THE FOLLOWING LOADS:
   TOP CHORD LIVE LOAD ..... 40 PSF
   TOP CHORD DEAD LOAD ..... 25 PSF
   BOTTOM CHORD LIVE LOAD ..... N/A
   BOTTOM CHORD DEAD LOAD ..... 10 PSF
4. IN ADDITION TO THE LOADS STATED ABOVE THE TRUSSES SHALL BE DESIGNED FOR ANY SNOW DRIFTING, MECHANICAL, AND/OR ANY SPECIAL LOAD CONDITIONS AS SHOWN ON STRUCTURAL OR ARCHITECTURAL PLANS.
5. ROOF TRUSSES SHALL BE DESIGNED FOR A MAXIMUM LIVE LOAD DEFLECTION OF L/240.
6. FLOOR TRUSSES SHALL BE DESIGNED FOR A MAXIMUM LIVE LOAD DEFLECTION OF L/480.
7. FABRICATION, HANDLING, STORAGE, AND ERECTION SHALL BE IN ACCORDANCE WITH "TRUSS PLATE INSTITUTION" RECOMMENDED PRACTICES AND SHALL BE DONE IN A WORKMAN LIKE MANNER SO AS TO NOT DAMAGE THE TRUSSES. TRUSSES SHALL NOT BE CUT, ADDED ONTO OR ALTERED IN ANY WAY WITH OUT THE WRITTEN CONSENT OF THE TRUSS DESIGNER, STRUCTURAL DESIGNER, OR ARCHITECT OF RECORD.
8. WOOD TRUSS DESIGNER/SUPPLIER SHALL SUBMIT FORMAL STAMPED CALCULATIONS BY A REGISTERED ENGINEER FOR REVIEW BEFORE FABRICATION.
9. SUBMIT A SET OF TRUSS SHOP DRAWINGS TO THE ARCHITECT & STRUCTURAL DESIGNER OF RECORD FOR APPROVAL PRIOR TO FABRICATION. CONTRACTOR SHALL REVIEW AND STAMP ALL SHOP DRAWINGS BEFORE SUBMITTING TO THE ARCHITECT.
10. SHOP DRAWING SUBMISSIONS SHALL INCLUDE THE FOLLOWING INFORMATION:
    - THE NAME, ADDRESS, PHONE NUMBER, AND FAX NUMBER OF THE SUPPLIER.
    - SLOPE OR DEPTH, SPAN AND SPACING
    - LOCATION OF ALL JOINTS
    - ALL DESIGN LOADS
    - ADJUSTMENTS TO LUMBER AND METAL CONNECTOR PLATE VALUES FOR CONDITIONS OF USE
    - EACH REACTION FORCE AND DIRECTION
    - METAL CONNECTOR PLATE TYPE, SIZE, GAUGE, AND THE DIMENSIONAL LOCATION OF EACH CONNECTOR PLATE
    - LUMBER SIZE, SPECIES, AND GRADE FOR EACH TRUSS MEMBER
    - CONNECTION REQUIREMENTS FOR TRUSS TO TRUSS GIRDER, TRUSS PLY TO PLY, AND FIELD SPLICES
    - CALCULATED DEFLECTION RATIO AND/OR MAXIMUM DEFLECTION FOR LIVE AND TOTAL LOAD
    - SPECIFY ALL TRUSS TO TRUSS CONNECTIONS AND HANGERS.
    - SPECIFY AND SHOW ALL PERMANENT TRUSS BRACING REQUIRED BY DESIGN.
11. CONTRACTOR IS RESPONSIBLE FOR ALL ERECTION PROCEDURES AND TEMPORARY TRUSS BRACING REQUIREMENTS DURING ERECTION IN ACCORDANCE WITH TPI's COMMENTARY AND RECOMMENDATIONS FOR HANDLING, INSTALLING, AND BRACING METAL PLATE CONNECTED WOOD TRUSSES (HIB-91 BOOKLET) AND THE CURRENT EDITION OF ANSI/TPI-1.
12. TRUSSES EXPOSED TO MOISTURE SHALL BE CONSTRUCTED OF PRESSURE TREATED WOOD AND GALVANIZED METAL PLATES.
13. FLOOR TRUSS SPACING SHOWN ON FRAMING PLANS ARE MAXIMUM SPACINGS. TRUSS DESIGNER SHALL REDUCE SPACING AS REQUIRED TO SUPPORT ALL LOADS SPECIFIED ON THESE PLANS AND BY CODE.
14. DESIGN ROOF TRUSSES TO RESIST ALL WIND LOADS INCLUDING UPLIFT LOADS (SEE WIND LOADING DIAGRAMS FOR INFORMATION).
15. ALL TRUSS TO TRUSS CONNECTIONS ARE TO BE DESIGNED, DETAILED, AND SUPPLIED BY THE TRUSS SUPPLIER/ DESIGNER.
16. TRUSS FABRICATOR SHALL FIELD VERIFY ALL SPAN DIMENSIONS BEFORE FABRICATING.

GENERAL:

1. ALL MATERIALS, CONSTRUCTION, AND DETAILS SHALL CONFORM WITH THE FOLLOWING: PLANS AND SPECIFICATIONS, BUILDING CODE INDICATED ABOVE & OSHA REGULATIONS.
2. THE GENERAL CONTRACTOR AND SUBCONTRACTORS SHALL BE FAMILIAR WITH THE ENTIRE SET OF CONSTRUCTION DOCUMENTS (ARCHITECTURAL, CIVIL, ELECTRICAL, PLUMBING, STRUCTURAL, ETC.) IN ORDER TO PROVIDE ALL CONSTRUCTION AND MATERIALS FOR THIS PROJECT.
3. THE CONTRACTOR SHALL REFER TO OTHER DRAWINGS CONTAINED IN THE CONSTRUCTION DOCUMENTS FOR ADDITIONAL SPECIFIED MEMBERS, DIMENSIONS, ELEVATIONS, DETAILS, OPENINGS, INSERTS, SLEEVES, DEPRESSIONS, ETC. NOT SHOWN ON THE STRUCTURAL DRAWINGS REQUIRED TO CONSTRUCT THIS PROJECT.
4. DETAILS SHOWN ON STRUCTURAL DRAWINGS SHALL BE APPLICABLE TO ALL PORTIONS OF THE CONTRACT DOCUMENTS UNLESS NOTED OTHERWISE.
5. DIMENSIONS AND ELEVATIONS SHOWN ON ARCHITECTURAL DRAWINGS SUPERSEDE DIMENSIONS AND ELEVATIONS SHOWN ON STRUCTURAL DRAWINGS.
6. DO NOT SCALE PLANS.
7. IN NO CASE SHALL STRUCTURAL ALTERATIONS OR WORK AFFECTING A STRUCTURAL MEMBER BE MADE UNLESS APPROVED BY THE STRUCTURAL DESIGNER OF RECORD.
8. IT IS SOLELY THE CONTRACTOR'S RESPONSIBILITY TO DETERMINE ERECTION PROCEDURE AND CONSTRUCTION SEQUENCE IN ORDER TO INSURE THE SAFETY OF THE BUILDING AND WORKMEN DURING CONSTRUCTION (MEANS & METHODS OF CONSTRUCTION). THIS INCLUDES, BUT IS NOT LIMITED TO: SHORING, UNDERPINNING, TEMPORARY BRACING, ETC.
9. CONSTRUCTION DOCUMENTS SHOW DIMENSIONS AND ELEVATIONS TO SIGNIFICANT WORKING POINTS (COLUMN CENTERLINES, OUTSIDE FACE OF WALLS, TOP OF FRAMING MEMBERS, ETC.) MATERIAL SUPPLIERS AND DESIGNERS ARE RESPONSIBLE FOR ALL OTHER INFORMATION IN ORDER TO DETAIL/FABRICATE THEIR WORK. CONTACT THE ARCHITECT WITH ANY DISCREPANCIES.
10. IN THE EVENT OF ANY DISCREPANCIES BETWEEN THE STRUCTURAL DRAWINGS AND ANY OTHER PLANS CONTAINED IN THIS SET OF CONSTRUCTION DOCUMENTS, THE CONTRACTOR SHALL BRING THE DISCREPANCY TO THE ARCHITECTS ATTENTION IN WRITING IMMEDIATELY OR SHALL BID THE MOST EXPENSIVE INSTALLATION SPECIFIED.

EXISTING CONSTRUCTION/CONDITIONS:

1. CONTRACTOR SHALL FIELD VERIFY ALL DIMENSIONS AND ELEVATIONS CORRESPONDING TO THE LOCATION OF EXISTING ELEMENTS (COLUMNS, BEAMS, WALLS, ETC.) NEEDED TO CONSTRUCT THIS PROJECT.
2. CONTRACTOR SHALL FIELD VERIFY EXISTING CONDITIONS AND NOTIFY ARCHITECT OF ANY CONFLICTS WITH CONSTRUCTION DOCUMENTS.
3. REMOVE AND REPLACE AND/OR MODIFY ALL EXISTING CONSTRUCTION (ARCHITECTURAL, STRUCTURAL, ELECTRICAL, MECHANICAL) AS REQUIRED IN ORDER TO PLACE NEW STRUCTURAL WORK SHOWN ON THE CONSTRUCTION DOCUMENTS.
4. CONTRACTOR SHALL DESIGN AND PROVIDE ALL SHORING REQUIRED TO SUPPORT EXISTING CONSTRUCTION AND NEW CONSTRUCTION AS REQUIRED TO BUILD THIS PROJECT.

PATERA LLC
Excellence in Architecture
2601 S. Sunny Slope Rd. • New Berlin, WI 53151
262-786-6776 FAX 262-786-7036

REVISIONS:
11/26/19: PRELIM #1
12/20/19: PRELIM #2
2/7/20: HPC SUBMITTAL
6/8/20: PROGRESS SET
7/8/20: CD'S ISSUED
8/25/20: REVISED CD'S
9/3/20: REVISED CD'S
11/16/20:SITE PLAN INFO
12/22/20: REVISIONS 1
1/13/21: REVISIONS

BRADY & MARSHALL MIXED USE

BRADY STREET
MILWAUKEE, WI

SHEET TITLE:
GENERAL NOTES

S.001

DATE: OCT. 24TH, 2019

PROJECT NUMBER: 19-419

COPYRIGHT: PATERA LLC...IT IS UNLAWFUL FOR ANYONE TO USE OR REPRODUCE BY ANY MEANS ALL OR ANY PORTION OF THESE CONSTRUCTION DOCUMENTS WITHOUT THE EXPRESSED WRITTEN PERMISSION OF PATERA LLC.

APPROVED
By Tim Askin - Milwaukee HPC at 1:10 pm, Feb 18, 2021

IBC TABLE 2304.9.1 FASTENING SCHEDULE FOR WOOD CONSTRUCTION:

CONNECTION	FASTENING	LOCATION
SOLE PLATE TO JOIST OR BLOCKING	16d COMMON (3 1/2"X0.162") @ 16" O.C. 3"X0.131" NAILS @ 8" O.C. 3" 14 GAGE STAPLE @ 12" O.C.	TYPICAL FACE NAIL
SOLE PLATE TO JOIST OR BLOCKING @ BRACED WALL PANEL	(3) 16d COMMON (3 1/2"X0.162") @ 16" O.C. (4) 3"X0.131" NAILS @ 16" O.C. (4) 3" 14 GAGE STAPLE @ 16" O.C.	TYPICAL FACE NAIL
SOLE PLATE TO JOIST OR BLOCKING @ BRACED WALL PANEL	(3) 16d COMMON (3 1/2"X0.162") @ 16" O.C. (4) 3"X0.131" NAILS @ 16" O.C. (4) 3" 14 GAGE STAPLE @ 16" O.C.	BRACED WALL PANELS
TOP PLATE TO STUD	(2) 16d COMMON (3 1/2"X0.162") (3) 3"X0.131" NAILS (3) 3" 14 GAGE STAPLE	END NAIL
DOUBLE STUDS	16d COMMON (3 1/2"X0.162") @ 24" O.C. 3"X0.131" NAILS @ 12" O.C. 3" 14 GAGE STAPLE @ 8" O.C.	FACE NAIL
DOUBLE TOP PLATES	16d COMMON (3 1/2"X0.162") @ 16" O.C. 3"X0.131" NAILS @ 12" O.C. 3" 14 GAGE STAPLE @ 12" O.C.	TYPICAL FACE NAIL
DOUBLE TOP PLATES (SPLICE/ LAP)	(8) 16d COMMON (3 1/2"X0.162") (12) 3"X0.131" NAILS (12) 3" 14 GAGE STAPLE	LAP SPLICE
BLOCKING BETWEEN JOISTS OR RAFTERS TO TOP PLATE	(3) 8d COMMON (2 1/2"X0.131") (3) 3"X0.131" NAILS (3) 3" 14 GAGE STAPLE	TOENAIL
RIM JOIST TO TOP PLATE	8d COMMON (2 1/2"X0.131") @ 6" O.C. 3"X0.131" NAILS @ 6" O.C. 3" 14 GAGE STAPLE @ 6" O.C.	TOENAIL
TOP PLATES, LAP & INTERSECTIONS	(2) 16d COMMON (3 1/2"X0.162") (3) 3"X0.131" NAILS (3) 3" 14 GAGE STAPLES	TOENAIL
CONTINUOUS HEADER, TWO PIECES	16d COMMON (3 1/2"X0.162")	16" O.C. ALONG EDGE
RAFTER TO PLATE	(3) 8d COMMON (2 1/2"X0.131") (3) 3"X0.131" NAILS (3) 3" 14 GAGE STAPLES	TOENAIL
BUILT-UP CORNER STUDS	16d COMMON (3 1/2"X0.162") @ 24" O.C. 3"X0.131" NAILS @ 16" O.C. 3" 14 GAGE STAPLES @ 16" O.C.	FACE NAIL
BUILT-UP GIRDER & BEAMS	20d COMMON (4"X0.192") @ 32" O.C. 3"X0.131" NAILS @ 24" O.C. 3" 14 GAGE STAPLES @ 24" O.C. (2) 20d COMMON (4"X0.192") (3) 3"X0.131" NAILS (3) 3" 14 GAGE STAPLES	FACE NAIL @ TOP & BOTTOM STAGGERED ON OPPOSITE SIDES FACE NAIL @ ENDS & @ EACH SPLICE
WOOD STRUCTURAL PANELS & PARTICLEBOARD SUB-FLOOR, ROOF & WALL SHEATHING (TO FRAMING) SINGLE FLOOR (COMBO. SUB-FLOOR UNDERLAYMENT TO FRAMING)	1/2" & LESS 6d 2 3/8"X0.113" NAIL 1 3/4" 16 GAGE STAPLE 19/32" TO 3/4" 8d OR 6d 2 3/8"X0.113" NAIL 2" 16 GAGE STAPLE 7/8" TO 1" 8d 1 1/8" TO 1 1/4" 10d OR 8d 3/4" & LESS 6d 7/8" TO 1" 8d 1 1/8" TO 1 1/4" 10d OR 8d	

COMPONENTS & CLADDING PRESSURES

COMPONENT	ZONE	POS. PRESS. (PSF)	NEG. PRESS. (PSF)
<10 sq. ft.	1	9.7	-23.8
25 sq. ft.	1	8.9	-23.0
50 sq. ft.	1	8.3	-22.4
>100 sq. ft.	1	7.7	-21.8
<10 sq. ft.	2	21.8	-34.9
25 sq. ft.	2	20.5	-34.3
50 sq. ft.	2	19.5	-30.0
>100 sq. ft.	2	18.6	-25.8
<10 sq. ft.	3	21.8	-34.9
25 sq. ft.	3	20.5	-34.3
50 sq. ft.	3	19.5	-30.0
>100 sq. ft.	3	18.6	-25.8
<10 sq. ft.	4	21.8	-23.6
50 sq. ft.	4	19.5	-21.3
200 sq. ft.	4	17.6	-19.4
>500 sq. ft.	4	16.3	-18.1
<10 sq. ft.	5	21.8	-23.6
50 sq. ft.	5	19.5	-21.3
200 sq. ft.	5	17.6	-19.4
>500 sq. ft.	5	16.3	-18.1

NOTE:
ALL WIND LOADS ARE ULTIMATE
a = 3.9FT

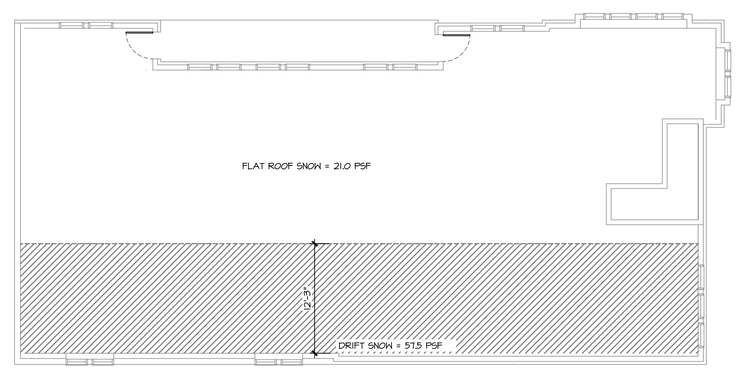

DRIFTED SNOW PLAN

1/4" = 1'-0"

PATERA LLC
Excellence in Architecture
2601 S. Sunny Slope Rd. • New Berlin, WI 53151
262-786-6776 FAX 262-786-7036

REVISIONS:
11/26/19: PRELIM #1
12/20/19: PRELIM #2
2/7/20: HPC SUBMITTAL
6/8/20: PROGRESS SET
7/8/20: CD'S ISSUED
8/25/20: REVISED CD'S
9/3/20: REVISED CD'S
11/16/20:SITE PLAN INFO
12/22/20: REVISIONS 1
1/13/21: REVISIONS

BRADY & MARSHALL MIXED USE

BRADY STREET
MILWAUKEE, WI

SHEET TITLE:
DRIFTED SNOW PLAN

S.002

DATE: OCT. 24TH, 2019

PROJECT NUMBER: 19-419

COPYRIGHT: PATERA LLC...IT IS UNLAWFUL FOR ANYONE TO USE OR REPRODUCE BY ANY MEANS ALL OR ANY PORTION OF THESE CONSTRUCTION DOCUMENTS WITHOUT THE EXPRESSED WRITTEN PERMISSION OF PATERA LLC.

COLUMN SCHEDULE				
MARK	SIZE	BASE PLATE	ANCHOR BOLTS	ADDITIONAL NOTES
C-1	W8x18	PL1x10"x1'-2" OFFSET	(4) 1" (16" EMBED)	ADDITIONAL PIER REINF. REQ'D SEE DTL 2/S.103
C-2	W8x18	PL1x10"x1'-2" OFFSET	(4) 1" (16" EMBED)	ADDITIONAL PIER REINF. REQ'D SEE DTL 2/S.103
C-3	HSS5x5x5/16	PL3/4x11x0'-11"	(4) $\frac{3}{4}$"	-
C-4	HSS4x4x1/4	PL3/4x10x0'-10"	(4) $\frac{3}{4}$"	COL. BRACED AT ALL STAIR LANDINGS

NOTES:
- ANCHOR BOLT EMBEDMENT: 12 x (BOLT DIAMETER).
- PROVIDE PLATE WASHER PL3/8x3x0'-3" w/ NUT TOP AND BOTTOM, TACK WELD NUTS TO BOLT

CONCRETE PIER SCHEDULE			
MARK	SIZE	VERTICAL REINFORCING	TIES
P-1	18x24	(6) #6 VERTICAL	#3 @ 12" OC
P-2	20X20	(6) #6 VERTICAL	#3 @ 12" OC
P-3	24x24	(8) #6 VERTICAL	#3 @ 12" OC
P-4	16x16	(4) #6 VERTICAL	#3 @ 12" OC

NOTES:
- PROVIDE DOWELS INTO FOOTING SAME SIZE AND QUANTITY AS PIER VERTICALS.
- PIERS TO BE POURED MONOLITHICALLY WITH FOUNDATION WALLS.

FOOTING SCHEDULE			
MARK	SIZE	REINFORCING	
F-1	6'-0"x4'-0"x12"	(3) #5 LW TOP AND BOTTOM (6) #5 SW	
F-2	4'-0"x4'-0"x12"	(4) #5 EACH WAY BOTTOM	
F-3	6'-0"x6'-0"x12"	(6) #5 EACH WAY TOP AND BOTTOM	
F-4	8'-0"x8'-0"x12"	(7) #5 EACH WAY TOP AND BOTTOM	

NOTES:
PROVIDE 3" CLEAR COVER AT ALL BARS.

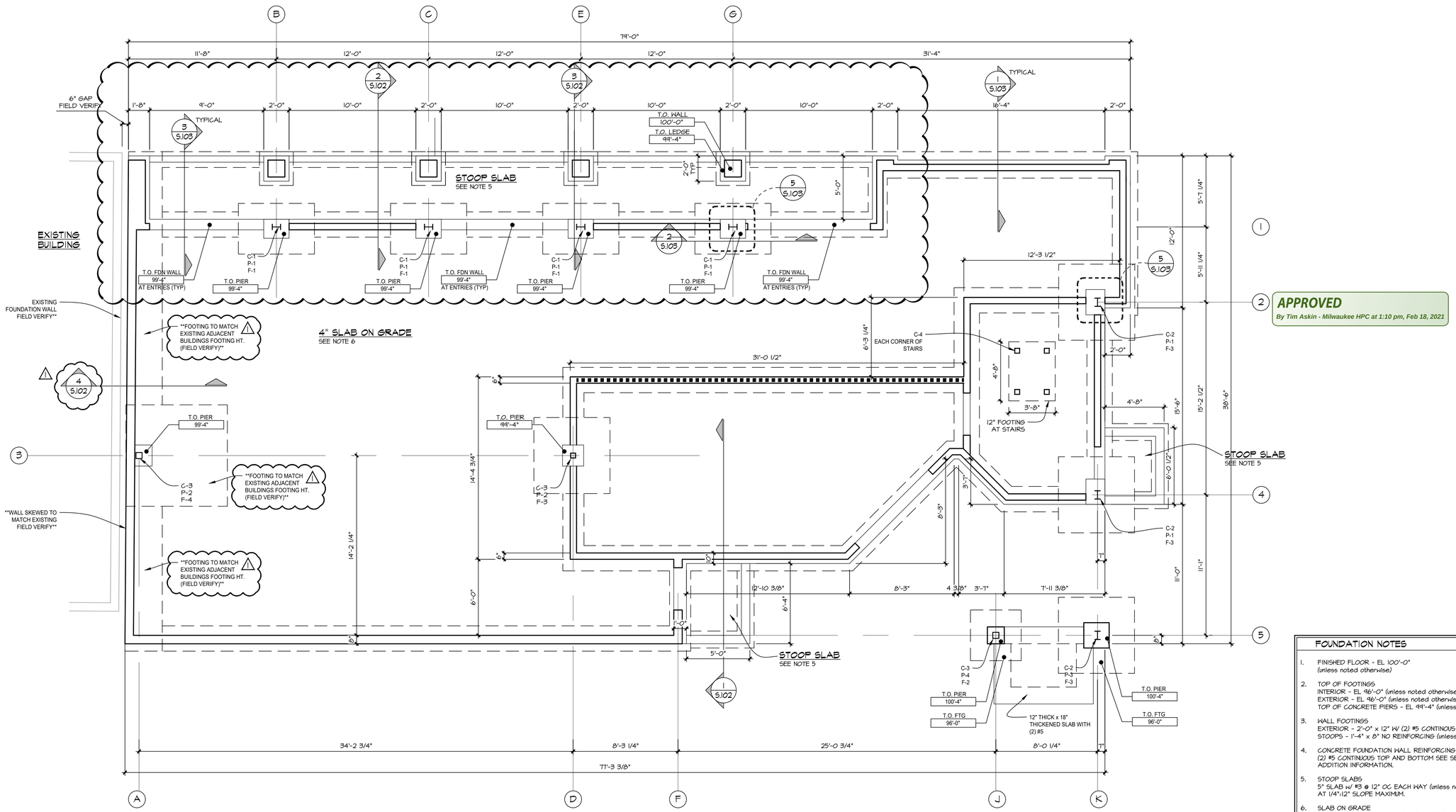

FOUNDATION PLAN

1/4" = 1'-0"

APPROVED
By Tim Askin - Milwaukee HPC at 1:10 pm, Feb 18, 2021

FOUNDATION NOTES

1. FINISHED FLOOR - EL 100'-0" (unless noted otherwise)
2. TOP OF FOOTINGS
   INTERIOR - EL 96'-0" (unless noted otherwise)
   EXTERIOR - EL 96'-0" (unless noted otherwise)
   TOP OF CONCRETE PIERS - EL 99'-4" (unless noted otherwise)
3. WALL FOOTINGS
   EXTERIOR - 2'-0" x 12" W/ (2) #5 CONTINOUS (unless noted otherwise)
   STOOPS - 1'-4" x 8" NO REINFORCING (unless noted otherwise)
4. CONCRETE FOUNDATION WALL REINFORCING
   (2) #5 CONTINUOUS TOP AND BOTTOM SEE SECTIONS FOR ADDITION INFORMATION.
5. STOOP SLABS
   5" SLAB w/ #3 @ 12" OC EACH WAY (unless noted otherwise)
   AT 1/4":12" SLOPE MAXIMUM.
6. SLAB ON GRADE
   4" CONCRETE SLAB W/ 3#/CU YD MACRO SYNTHETIC POLYPROPYLENE FIBERS ON VAPOR BARRIER ON 6" COARSE STONE BASE COMPACTED 95% MODIFIED PROCTOR

PATERA LLC
Excellence in Architecture
2601 S. Sunny Slope Rd. • New Berlin, WI 53151
262-786-6776 FAX 262-786-7036

REVISIONS:
11/26/19: PRELIM #1
12/20/19: PRELIM #2
2/7/20: HPC SUBMITTAL
6/8/20: PROGRESS SET
7/8/20: CD'S ISSUED
8/25/20: REVISED CD'S
9/3/20: REVISED CD'S
11/16/20:SITE PLAN INFO
12/22/20: REVISIONS 1
1/13/21: REVISIONS

BRADY & MARSHALL MIXED USE

BRADY STREET
MILWAUKEE, WI

SHEET TITLE:
FOUNDATION PLAN

S.101

DATE: OCT. 24TH, 2019

PROJECT NUMBER: 19-419

COPYRIGHT: PATERA LLC...IT IS UNLAWFUL FOR ANYONE TO USE OR REPRODUCE BY ANY MEANS ALL OR ANY PORTION OF THESE CONSTRUCTION DOCUMENTS WITHOUT THE EXPRESSED WRITTEN PERMISSION OF PATERA LLC.

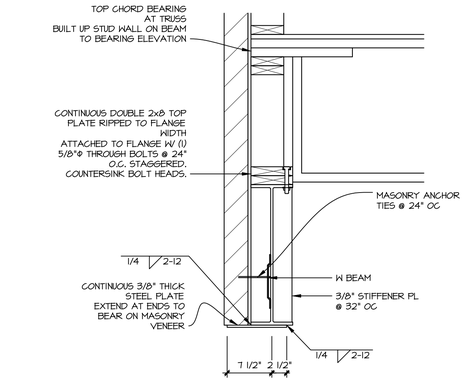

5 / S.102 STEEL BEAM
1" = 1'-0"

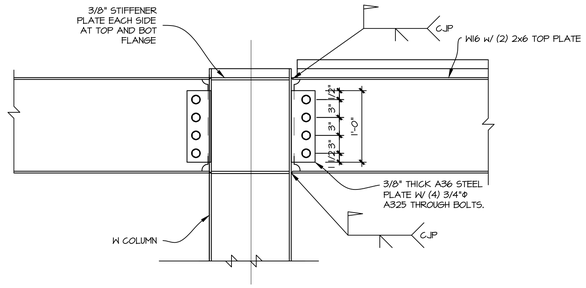

6 / S.102 MOMENT CONNECTION DETAIL
1" = 1'-0"

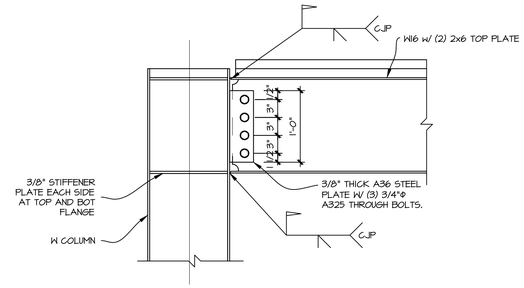

7 / S.102 MOMENT CONNECTION DETAIL
1" = 1'-0"

APPROVED
By Tim Askin - Milwaukee HPC at 1:10 pm, Feb 18, 2021

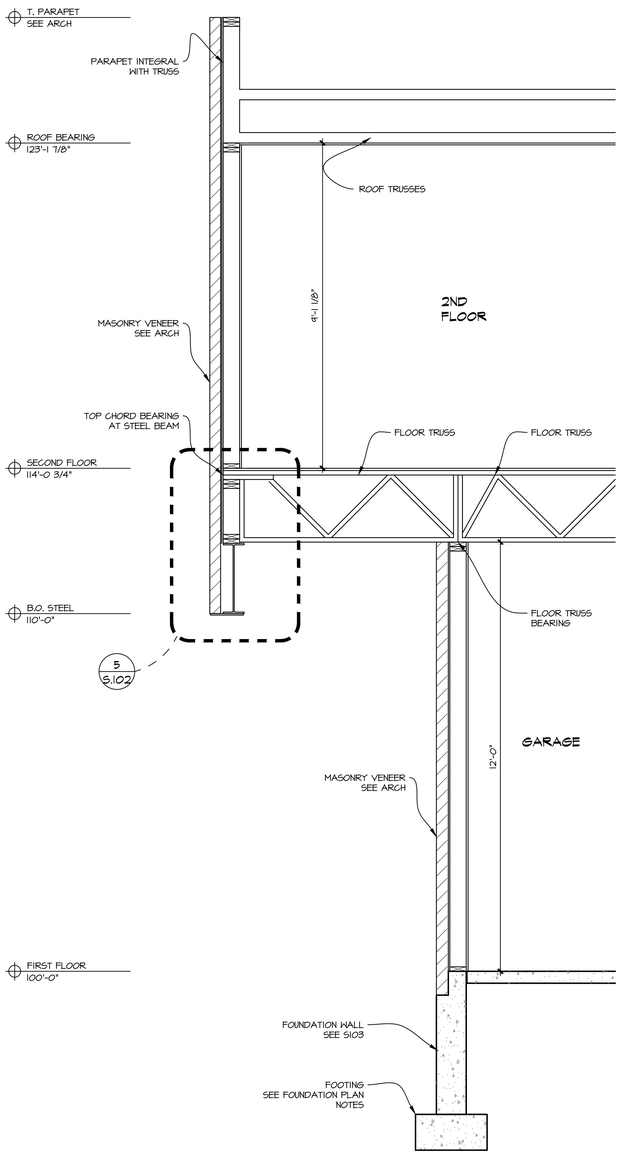

1 / S.102 REAR WALL SECTION
1/2" = 1'-0"

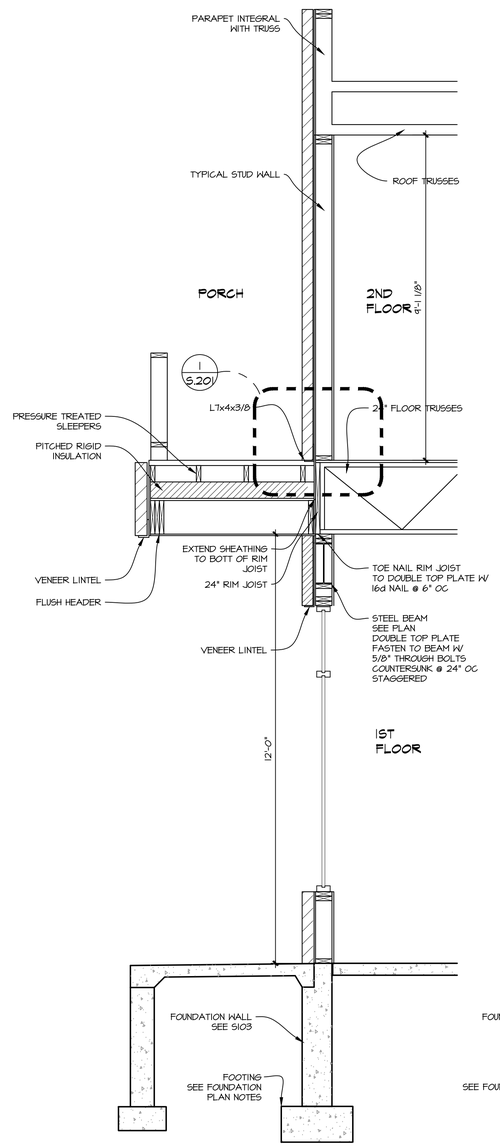

2 / S.102 FRONT WALL SECTION
1/2" = 1'-0"

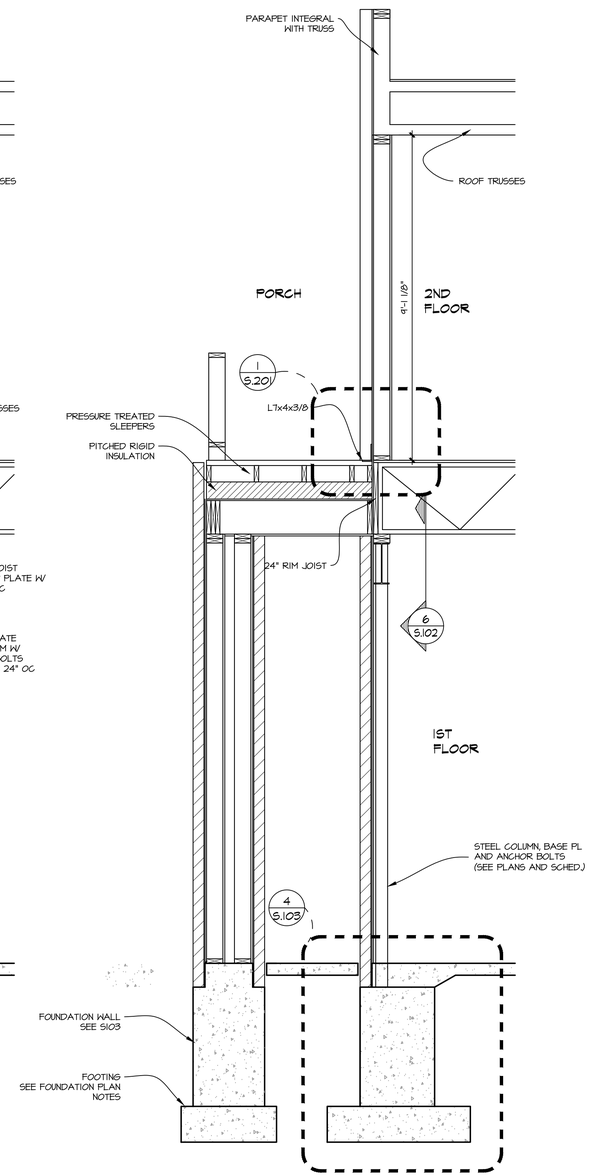

3 / S.102 FRONT WALL SECTION AT COLUMNS
1/2" = 1'-0"

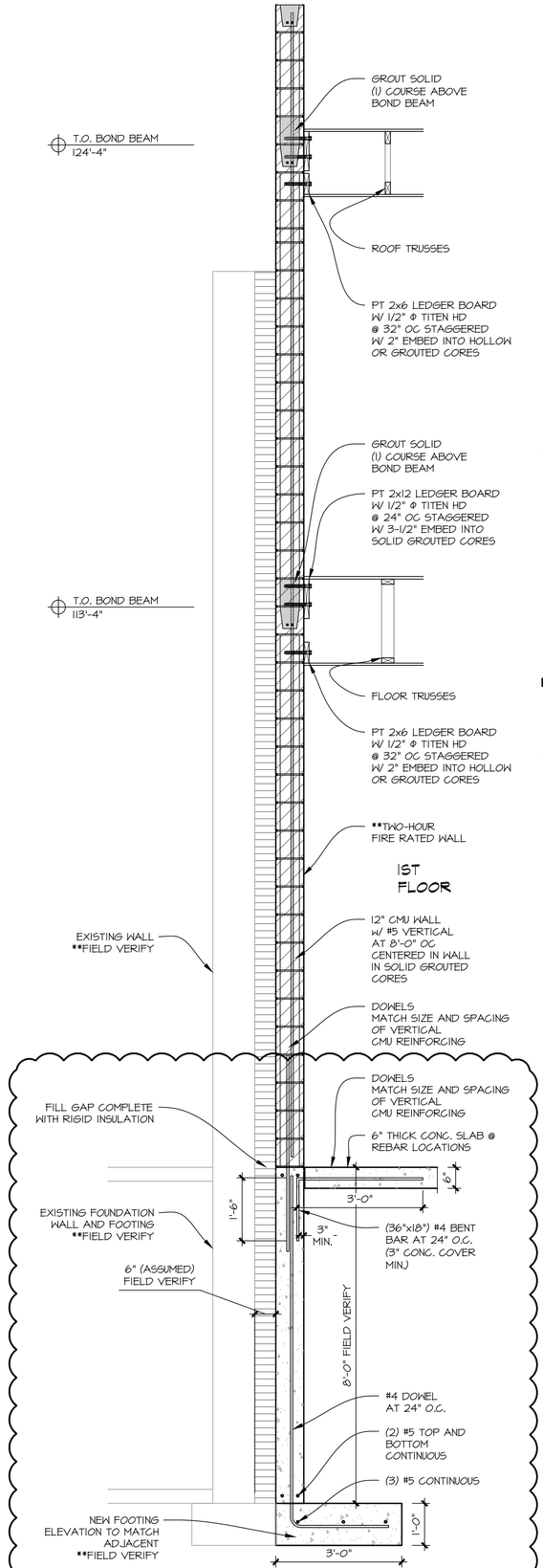

1 4 / S.102 SIDE WALL SECTION
1/2" = 1'-0"

PATERA LLC
Excellence in Architecture
2601 S. Sunny Slope Rd. • New Berlin, WI 53151
262-786-6776 FAX 262-786-7036

REVISIONS:
11/26/19: PRELIM #1
12/20/19: PRELIM #2
2/7/20: HPC SUBMITTAL
6/8/20: PROGRESS SET
7/8/20: CD'S ISSUED
8/25/20: REVISED CD'S
9/3/20: REVISED CD'S
11/16/20:SITE PLAN INFO
12/22/20: REVISIONS 1
1/13/21: REVISIONS

BRADY & MARSHALL MIXED USE

BRADY STREET
MILWAUKEE, WI

SHEET TITLE:
FOUNDATION PLAN

S.102

DATE: OCT. 24TH, 2019

PROJECT NUMBER: 19-419

COPYRIGHT: PATERA LLC...IT IS UNLAWFUL FOR ANYONE TO USE OR REPRODUCE BY ANY MEANS ALL OR ANY PORTION OF THESE CONSTRUCTION DOCUMENTS WITHOUT THE EXPRESSED WRITTEN PERMISSION OF PATERA LLC.

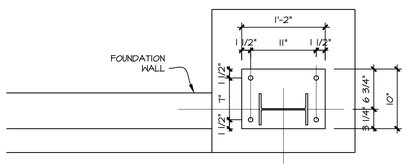

5 / S.103 BASE PLATE PLAN DETAIL
1" = 1'-0"

APPROVED
By Tim Askin - Milwaukee HPC at 1:10 pm, Feb 18, 2021

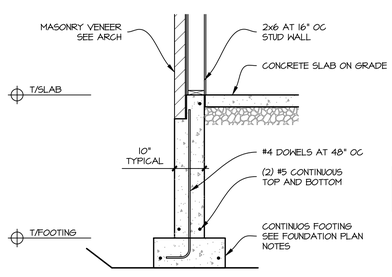

1 / S.103 TYPICAL FOUNDATION WALL
1/2" = 1'-0"

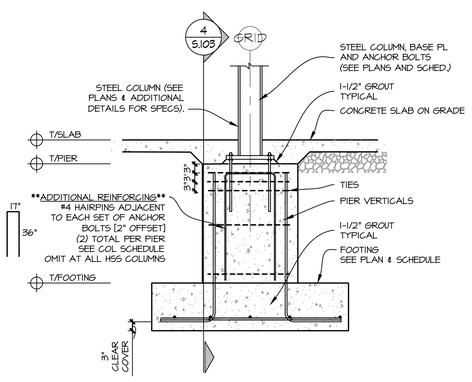

2 / S.103 TYPICAL CONCRETE PIER
1/2" = 1'-0"

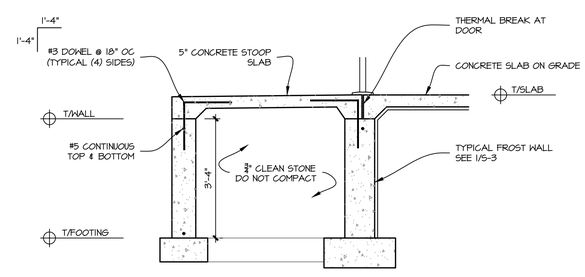

3 / S.103 TYPICAL CONCRETE STOOP
1/2" = 1'-0"

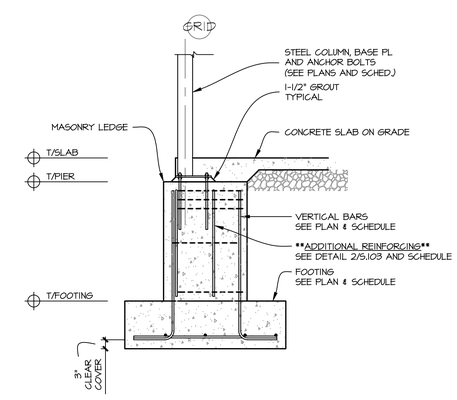

4 / S.103 TYPICAL CONCRETE COLUMN AT WALL
1/2" = 1'-0"

PATERA LLC
Excellence in Architecture
2601 S. Sunny Slope Rd. • New Berlin, WI 53151
262-786-6776 FAX 262-786-7036

REVISIONS:
11/26/19: PRELIM #1
12/20/19: PRELIM #2
2/7/20: HPC SUBMITTAL
6/8/20: PROGRESS SET
7/8/20: CD'S ISSUED
8/25/20: REVISED CD'S
9/3/20: REVISED CD'S
11/16/20:SITE PLAN INFO
12/22/20: REVISIONS 1
1/13/21: REVISIONS

BRADY & MARSHALL MIXED USE

BRADY STREET
MILWAUKEE, WI

SHEET TITLE:
SECTIONS AND DETAILS

S.103

DATE: OCT. 24TH, 2019

PROJECT NUMBER: 19-419

COPYRIGHT: PATERA LLC...IT IS UNLAWFUL FOR ANYONE TO USE OR REPRODUCE BY ANY MEANS ALL OR ANY PORTION OF THESE CONSTRUCTION DOCUMENTS WITHOUT THE EXPRESSED WRITTEN PERMISSION OF PATERA LLC.

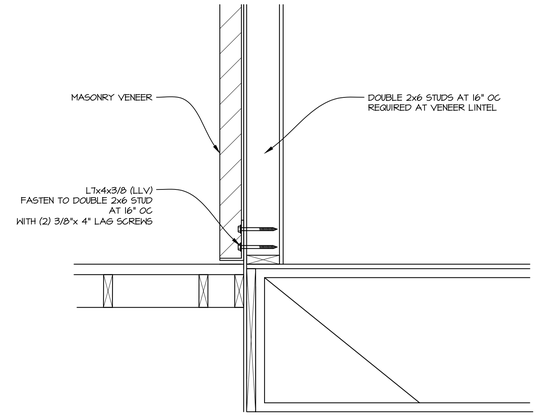

1 / S.201 MOMENT CONNECTION DETAIL
1" = 1'-0"

APPROVED
By Tim Askin - Milwaukee HPC at 1:10 pm, Feb 18, 2021

fdsf

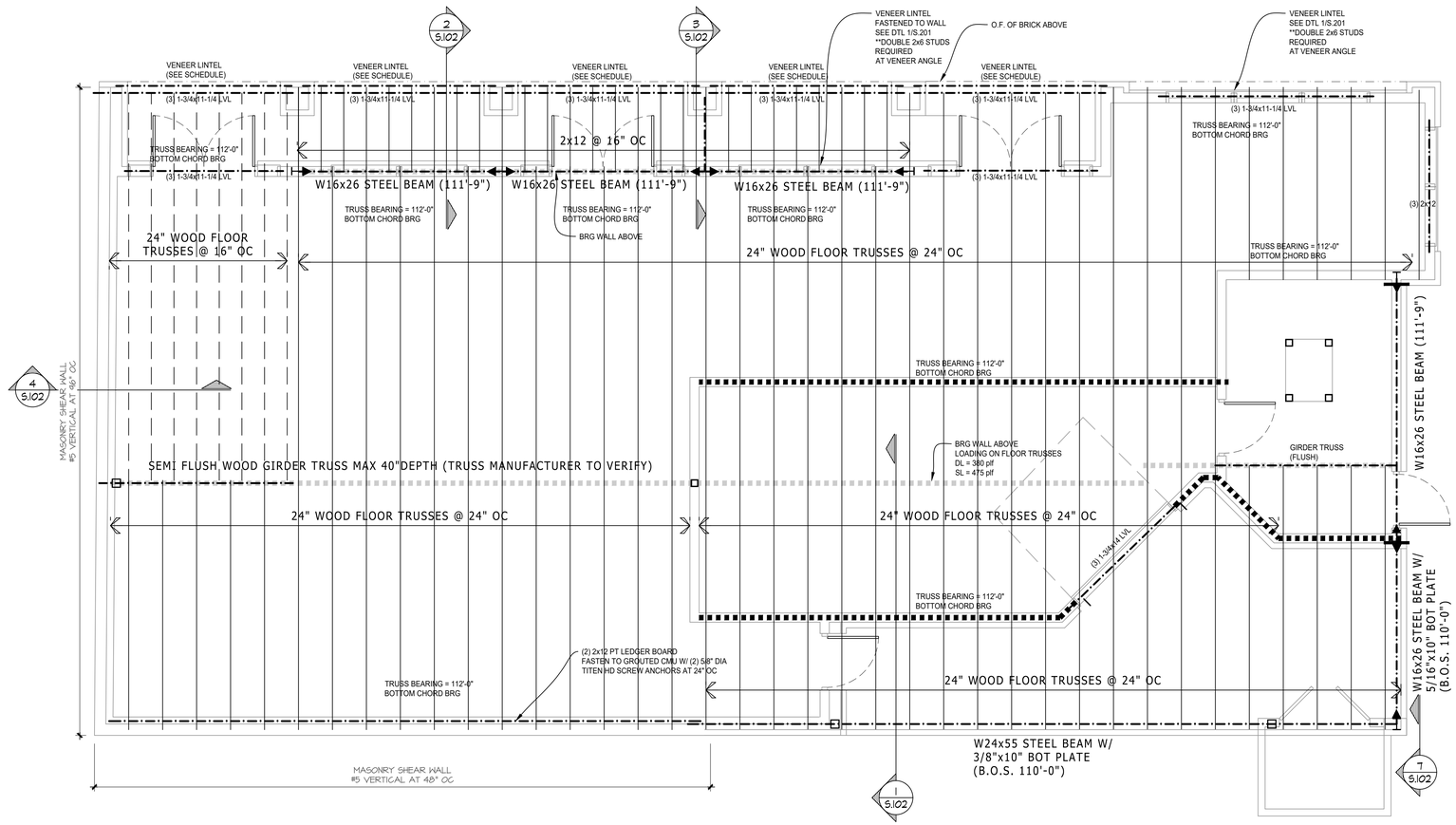

SECOND FLOOR FRAMING PLAN

1/4" = 1'-0"

VENEER LINTEL SCHEDULE			
MAX. OPENING (FEET)	LINTEL SIZE	BEARING SPECIFICATIONS	ADDITIONAL NOTES
6'-0" & LESS	L4X4X5/16	PROVIDE 4" OF BEARING MIN. @ EACH END OF LINTEL.	-
6'-0" - 8'-0"	L5X4X5/16 (LLV)	PROVIDE 4" OF BEARING MIN. @ EACH END OF LINTEL.	-
8'-0" - 10'-0"	L7X4X3/8 (LLV)	PROVIDE 8" OF BEARING MIN. @ EACH END OF LINTEL.	-

NOTES:
STEEL ANGLES TO BE A36 UNLESS OTHERWISE NOTED ON PLANS OR DETAILS.

FLOOR FRAMING NOTES

1. TOP OF STEEL - ELEVATION NOTED AS (XXX'-X")
2. FLOOR DECK - 3/4" LIGHT WEIGHT ON 23/32" OSB SHEATHING, ATTACH TO FRAMING W/ 10d NAILS @ 6" O.C. @ PANEL EDGES & 12" O.C. IN THE FIELD
3. ▶ INDICATES MOMENT CONNECTION SEE DETAIL 6 & 7 ON S.102
4. TRUSSES SHALL BE DESIGNED FOR THE LOADS INDICATED IN THE GENERAL NOTES AND ANY ADDITION LOADS SHOWN ON PLAN

PATERA LLC
Excellence in Architecture
2601 S. Sunny Slope Rd. • New Berlin, WI 53151
262-786-6776 FAX 262-786-7036

REVISIONS:
11/26/19: PRELIM #1
12/20/19: PRELIM #2
2/7/20: HPC SUBMITTAL
6/8/20: PROGRESS SET
7/8/20: CD'S ISSUED
8/25/20: REVISED CD'S
9/3/20: REVISED CD'S
11/16/20:SITE PLAN INFO
12/22/20: REVISIONS 1
1/13/21: REVISIONS

FOR BID USE

BRADY & MARSHALL MIXED USE

BRADY STREET
MILWAUKEE, WI

SHEET TITLE:
SECOND FLOOR FRAMING PLAN

S.201

DATE: OCT. 24TH, 2019

PROJECT NUMBER: 19-419

COPYRIGHT: PATERA LLC...IT IS UNLAWFUL FOR ANYONE TO USE OR REPRODUCE BY ANY MEANS ALL OR ANY PORTION OF THESE CONSTRUCTION DOCUMENTS WITHOUT THE EXPRESSED WRITTEN PERMISSION OF PATERA LLC.

APPROVED
By Tim Askin - Milwaukee HPC at 1:10 pm, Feb 18, 2021

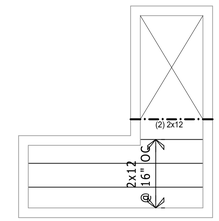

HEAD HOUSE FRAMING PLAN

1/4" = 1'-0"

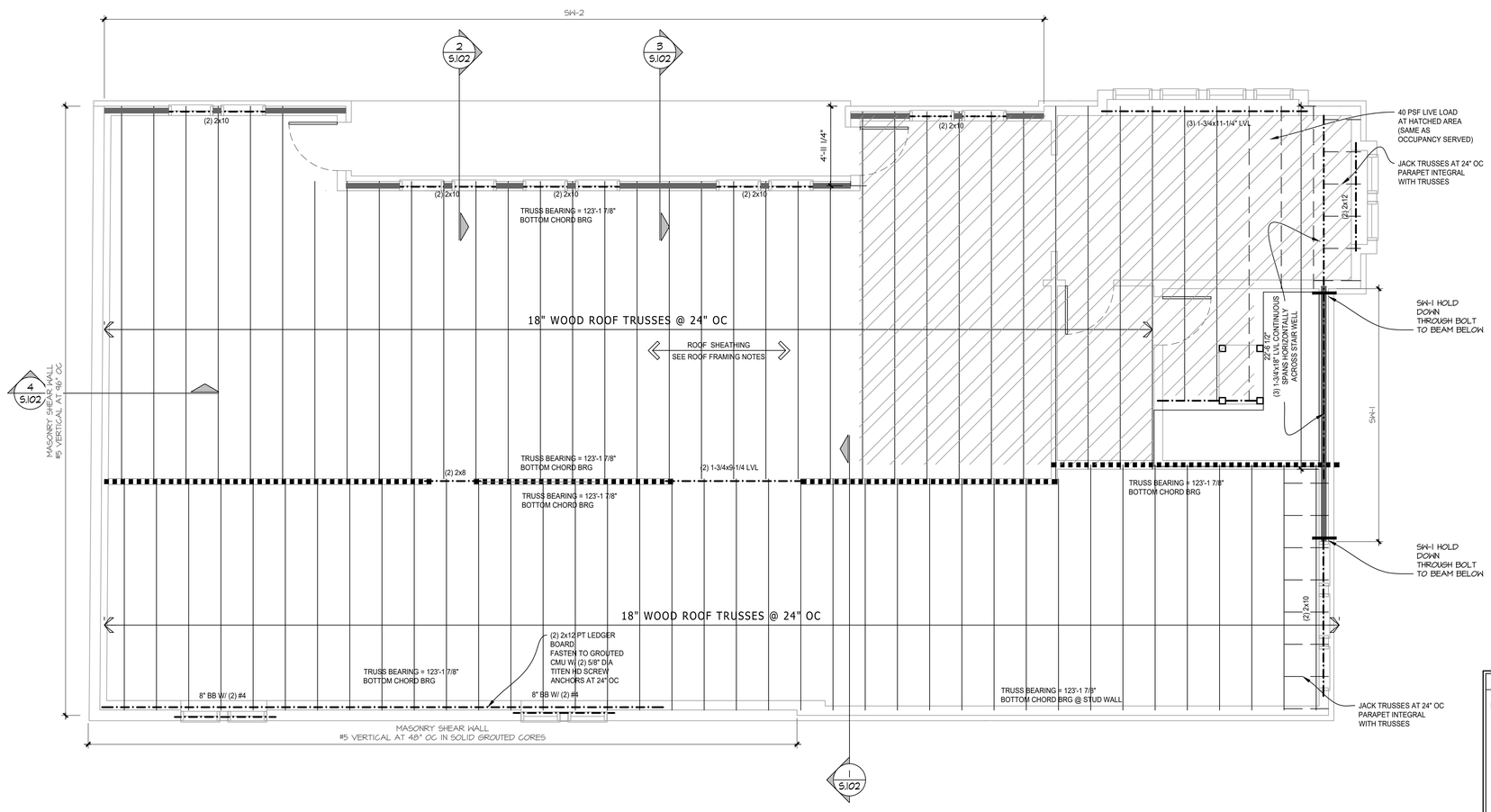

ROOF FRAMING NOTES

1. TOP OF STEEL - ELEVATION NOTED AS (XXX'-X")
2. ROOF DECK - 19/32" OSB SHEATHING WITH "H-CLIPS" BETWEEN RAFTERS, ATTACH TO FRAMING W/ 10d NAILS @ 6" O.C. @ PANEL EDGES & 12" O.C. IN THE FIELD
3. TRUSSES SHALL BE DESIGNED FOR THE LOADS INDICATED IN THE GENERAL NOTES AND ANY ADDITION LOADS SHOWN ON PLAN INCLUDING DRIFTED SNOW
4. TEMPORARY BRACING SHALL BE SELECTED BY OTHERS BUT SHALL NOT BE LESS THAN 2x4 @ 6'-0" OC AT TOP CHORDS, AND 8'-0" AT BOTTOM CHORDS AND 20'-0" OC AT WEB MEMBERS

ROOF FRAMING PLAN

1/4" = 1'-0"

PATERA LLC
Excellence in Architecture
2601 S. Sunny Slope Rd. • New Berlin, WI 53151
262-786-6776 FAX 262-786-7036

REVISIONS:
11/26/19: PRELIM #1
12/20/19: PRELIM #2
2/7/20: HPC SUBMITTAL
6/8/20: PROGRESS SET
7/8/20: CD'S ISSUED
8/25/20: REVISED CD'S
9/3/20: REVISED CD'S
11/16/20:SITE PLAN INFO
12/22/20: REVISIONS 1
1/13/21: REVISIONS

BRADY & MARSHALL MIXED USE

BRADY STREET
MILWAUKEE, WI

SHEET TITLE:
ROOF FRAMING PLAN

S.301

DATE: OCT. 24TH, 2019

PROJECT NUMBER: 19-419

COPYRIGHT: PATERA LLC...IT IS UNLAWFUL FOR ANYONE TO USE OR REPRODUCE BY ANY MEANS ALL OR ANY PORTION OF THESE CONSTRUCTION DOCUMENTS WITHOUT THE EXPRESSED WRITTEN PERMISSION OF PATERA LLC.