September 19, 2023

3033 W. Kilbourne
Milwaukee, WI 53208

STRUCTURAL CALCULATIONS FOR

Reinforcing of Existing Garage For 2nd floor occupancy and Rooftop Solar Panels

Prepared by:

BLODGETT
Engineering, LLC
W169 N10815 Redwood Lane
Germantown, WI 53022
262-293-9923
blodgetteng@wi.rr.com

WISCONSIN
MICHAEL E. BLODGETT
E-36475
GERMANTOWN
WI
PROFESSIONAL ENGINEER

9/19/2023

This report is limited to items specifically calculated and documented herein, members, connections, or details not specifically covered, shall be built in accordance with WI SPS 321, the WI Deck Code (SPS 320-325 Appendix B) or the IRC as required.

BLODGETT ENGINEERING LLC
STRUCTURAL CONSULTING ENGINEERS
W169 N10815 Redwood Lane
Germantown, WI 53022
blodgetteng@wi.rr.com
Tel/Fax: 262.293.9923

JOB _____
SHEET NO. _____ OF _____
CALCULATED BY _____ DATE _____

CONNECTIONS FOR NEW COLLARTIE

T = −0.39223 K New upper tie = 392.2 #

USE 10d NAILS = 69# x 1.15 = 79.35 #/NAIL ⇒ 4.94 NAILS REQ'D

USE (6) 10d NAILS

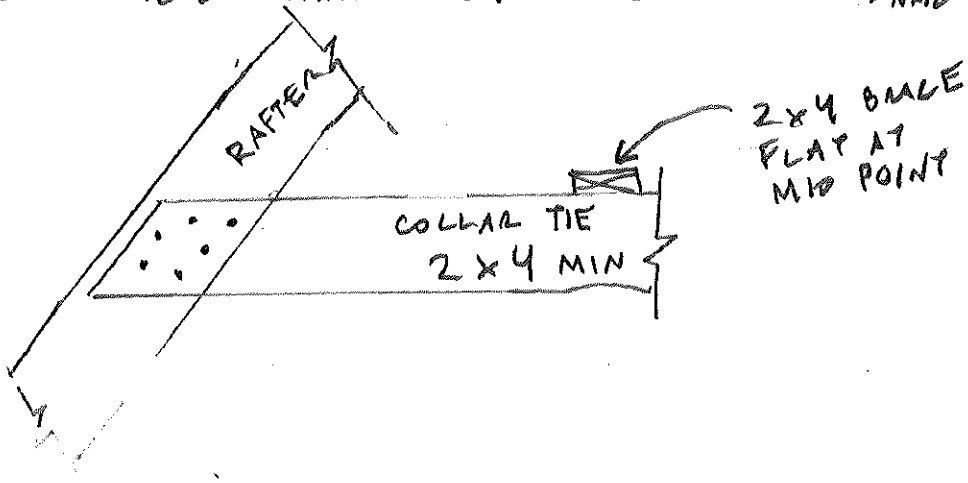

(−) C
(+) T

WALL CONNECTIONS (TOP + BOTTOM)

STUDWALL
C = −475.3 #
COMPRESSION:
USE: (3) 10d NAILS

DIAGONAL
1.4564 K (T)
= 1456.4 #

USE: MSTA 24 STRAP (UP AND OVER RAFTER)

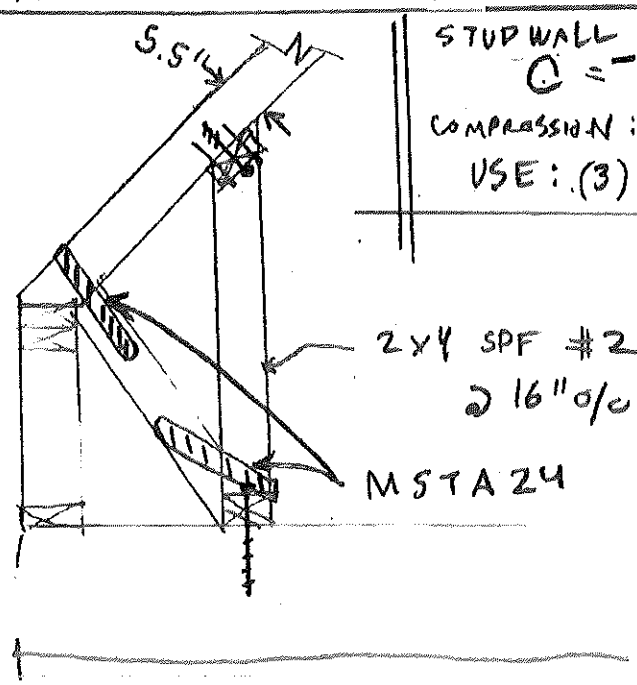

BLODGETT ENGINEERING LLC
STRUCTURAL CONSULTING ENGINEERS
W169 N10815 Redwood Lane
Germantown, WI 53022
blodgetteng@wi.rr.com
Tel/Fax: 262.293.9923

JOB NICHOLAS: ROOF CHECK
SHEET NO. ____ OF ____
CALCULATED BY MEB DATE 9/16/2023

LOADS:

SNOW = 30 psf × 0.625 = 18.75 psf → USE 20 psf MIN

$C_s = 1 - \left(\frac{45-30}{40}\right) = 0.625$

DL = SHINGLES × 2 = 4
1× BOARDS = 2.5 psf
PLYWOOD = 1.5 psf
RS 2 × 6 @ 16" o/c = 2 psf
+ MISC + COW = 2 psf

12 psf
+ ADD SOLAR = 3 psf
15 psf

3rd
LL = 5 psf × 1.33 = 6.66 plf
DL = 10 psf × 1.33 = 13.33 plf

2ND
LL = 40 psf × 1.33 = 0.053 klf
DL = 15 psf × 1.33 = 0.02 klf

LOADS TO MODEL:

SNOW = 20 psf × 1.33 = 26.66 plf = 0.026 klf

DL = 15 × 1.33 = 20 plf = 0.02 klf

WIND = 20 psf × 1.33' = 0.0266 klf

- SCC REPORT OUTPUT
- ADD NEW COLLARTIES
- ADD REINFORCING AT CORNERS OF 2ND FLOOR TO REINFORCE 42" WALLS

REMOVE DORMER

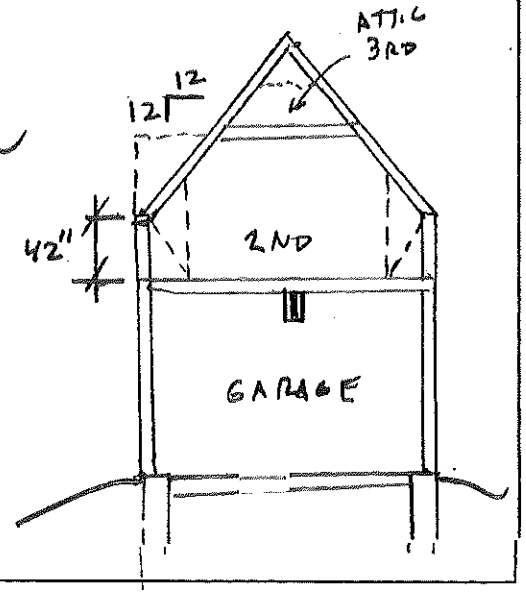

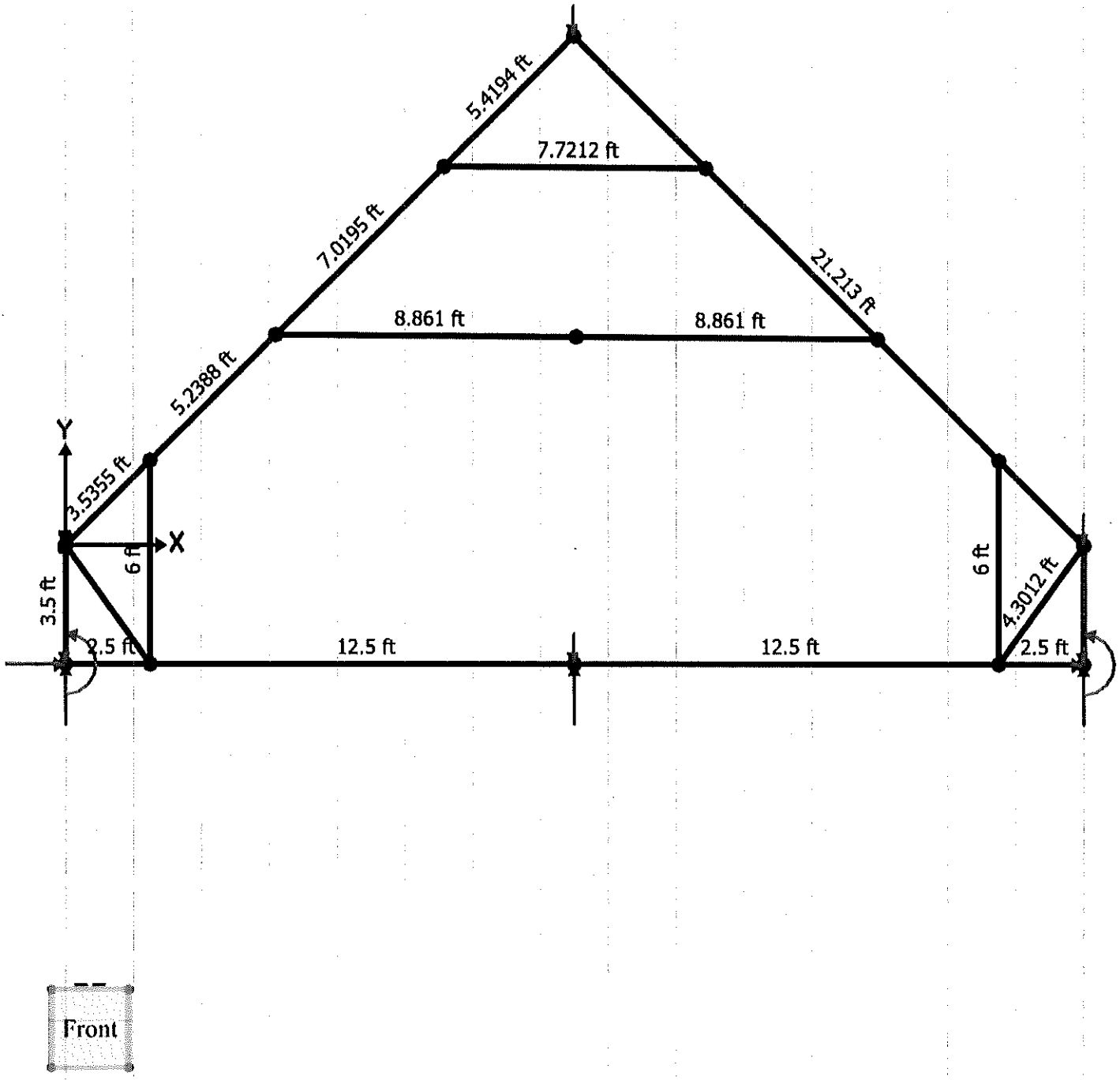
5.4194 ft
7.7212 ft
7.0195 ft
21.213 ft
8.861 ft
8.861 ft
5.2388 ft
Y
3.5355 ft
X
6 ft
3.5 ft
2.5 ft
12.5 ft
12.5 ft
6 ft
4.3012 ft
2.5 ft
Front

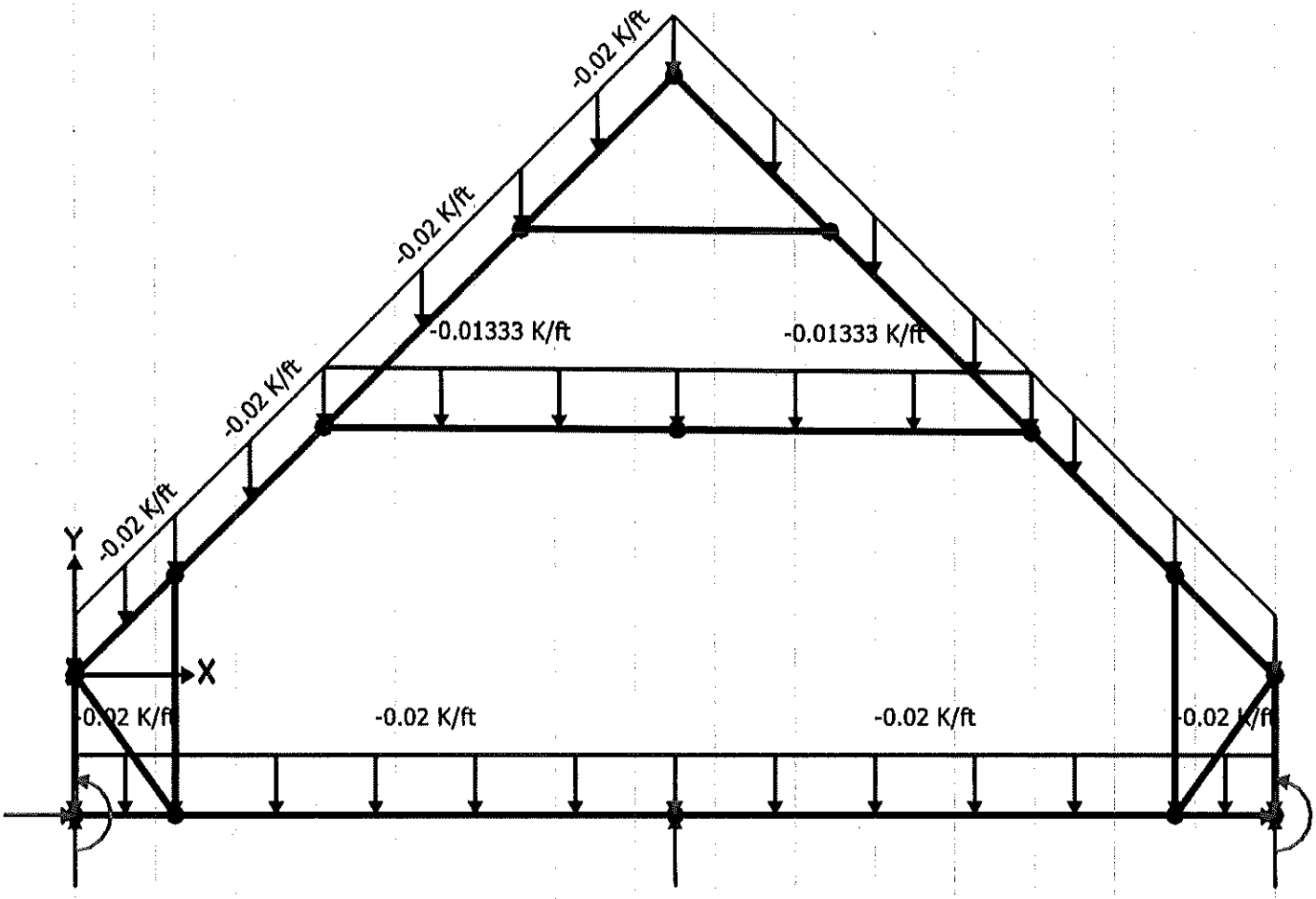
-0.02 K/ft
-0.02 K/ft
-0.01333 K/ft
-0.01333 K/ft
-0.02 K/ft
-0.02 K/ft
Y
X
-0.02 K/ft
-0.02 K/ft
-0.02 K/ft
-0.02 K/ft

Front

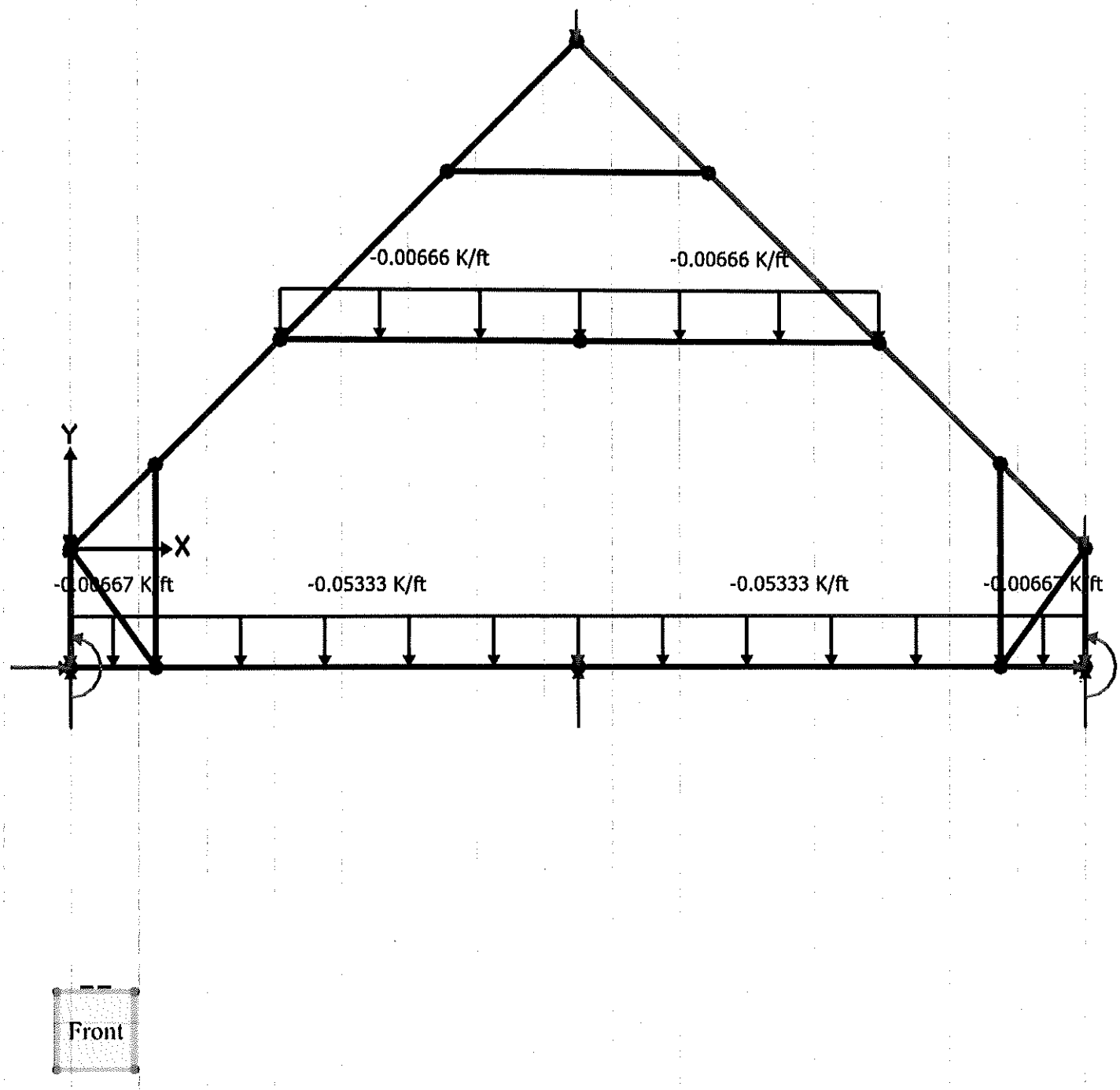
-0.00666 K/ft
-0.00666 K/ft
Y
X
-0.00667 K/ft
-0.05333 K/ft
-0.05333 K/ft
-0.00667 K/ft
Front

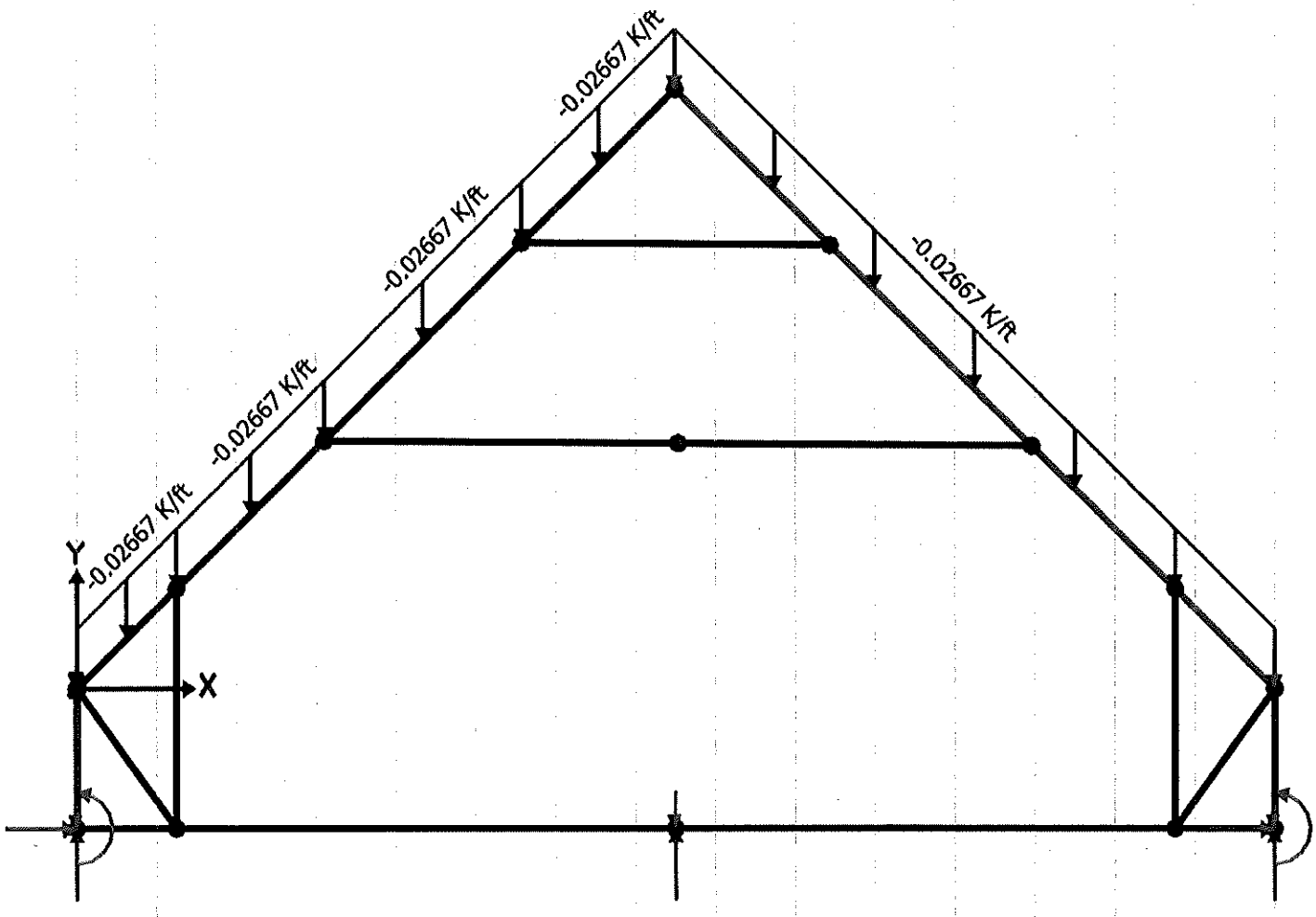

Front

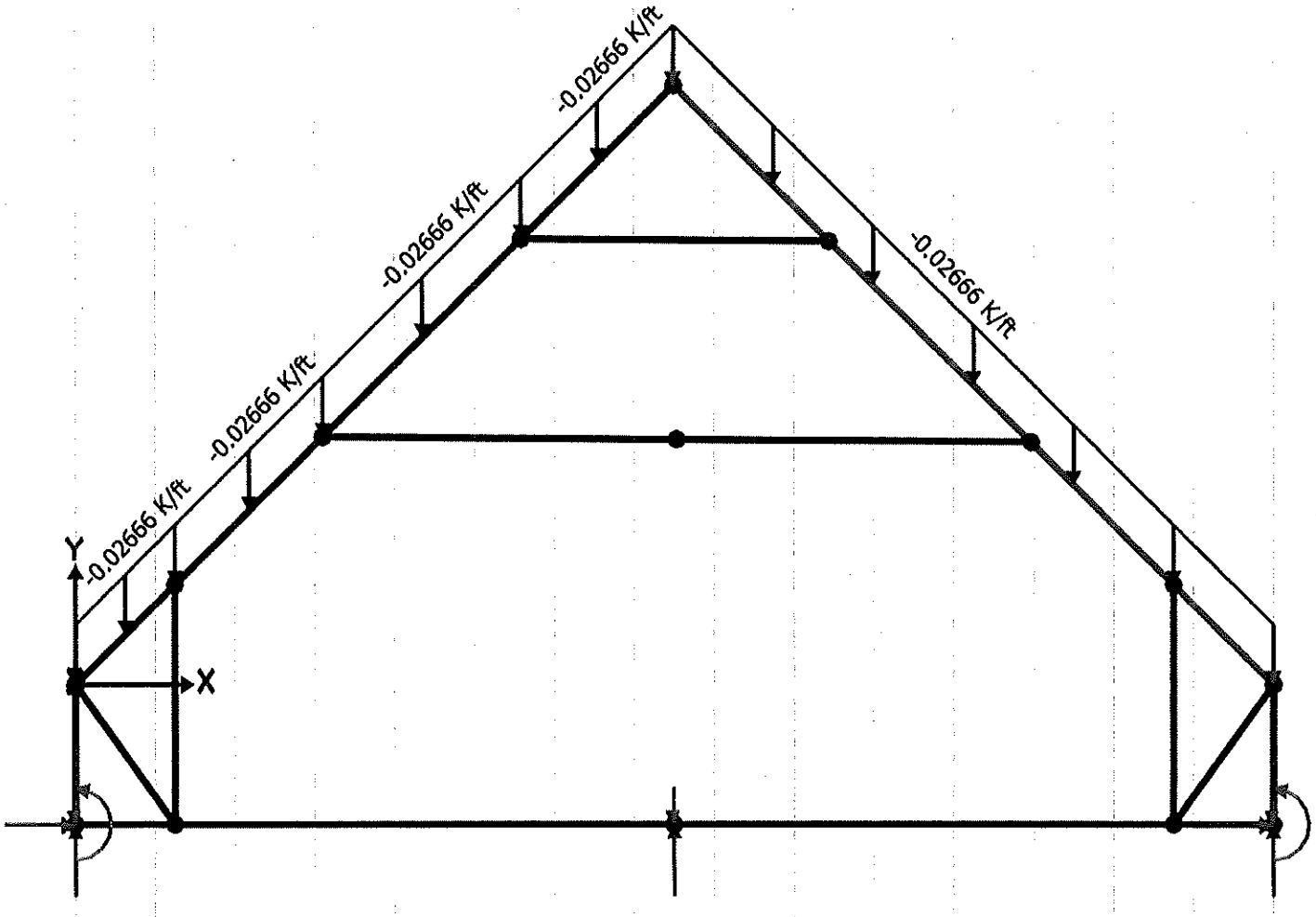

Front

BLODGETT ENGINEERING LLC
STRUCTURAL CONSULTING ENGINEERS
W169 N10815 Redwood Lane
Germantown, WI 53022
blodgetteng@wi.rr.com
Tel/Fax: 262.293.9923

JOB _____
SHEET NO. _____ OF _____
CALCULATED BY _____ DATE _____

REACTIONS FOR FLOOR SUPPORT BEAM:

LOAD / FOOT (x 12/16)

$P_D = 0.3028$ K x1000 → 302.8 x 12/16 = 227.1 plf

$P_L = 0.7666$ K x1000 → 766.6 x 12/16 = 574.95 plf

$P_{RL} = 0$

$P_S = 0$

$P_{W*} = 0.023$ K → 23 x 12/16 = 17.25 plf

FLOOR SUPPORT BEAM:

USE: (3) 18" LVL (2.0E)

W/ (1) POST BELOW LOCATED

* 11.5' FROM WEST WALL (TO LAND BETWEEN DOORS)

(BRG. REQUIREMENT IS 6.66" x 5.25") = 35 in²

SUPPORT POST:

• USE A 5.25" x 5.25" 1.8E PARALLAM POST

* ADD A BRG. PLATE AT TOP
5.25 x 8 = 42 in² ⇒ ok

REACTION = 19,771#

CAPACITY = 25270#

USE PB66 POST BASE

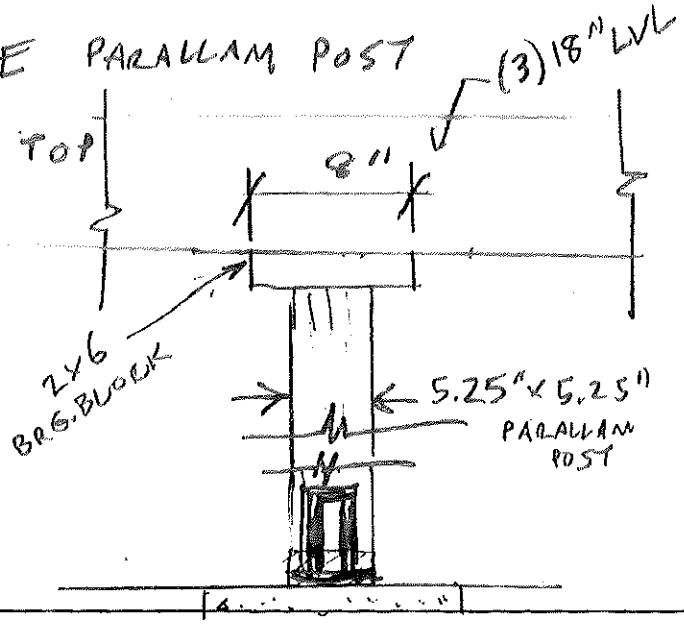

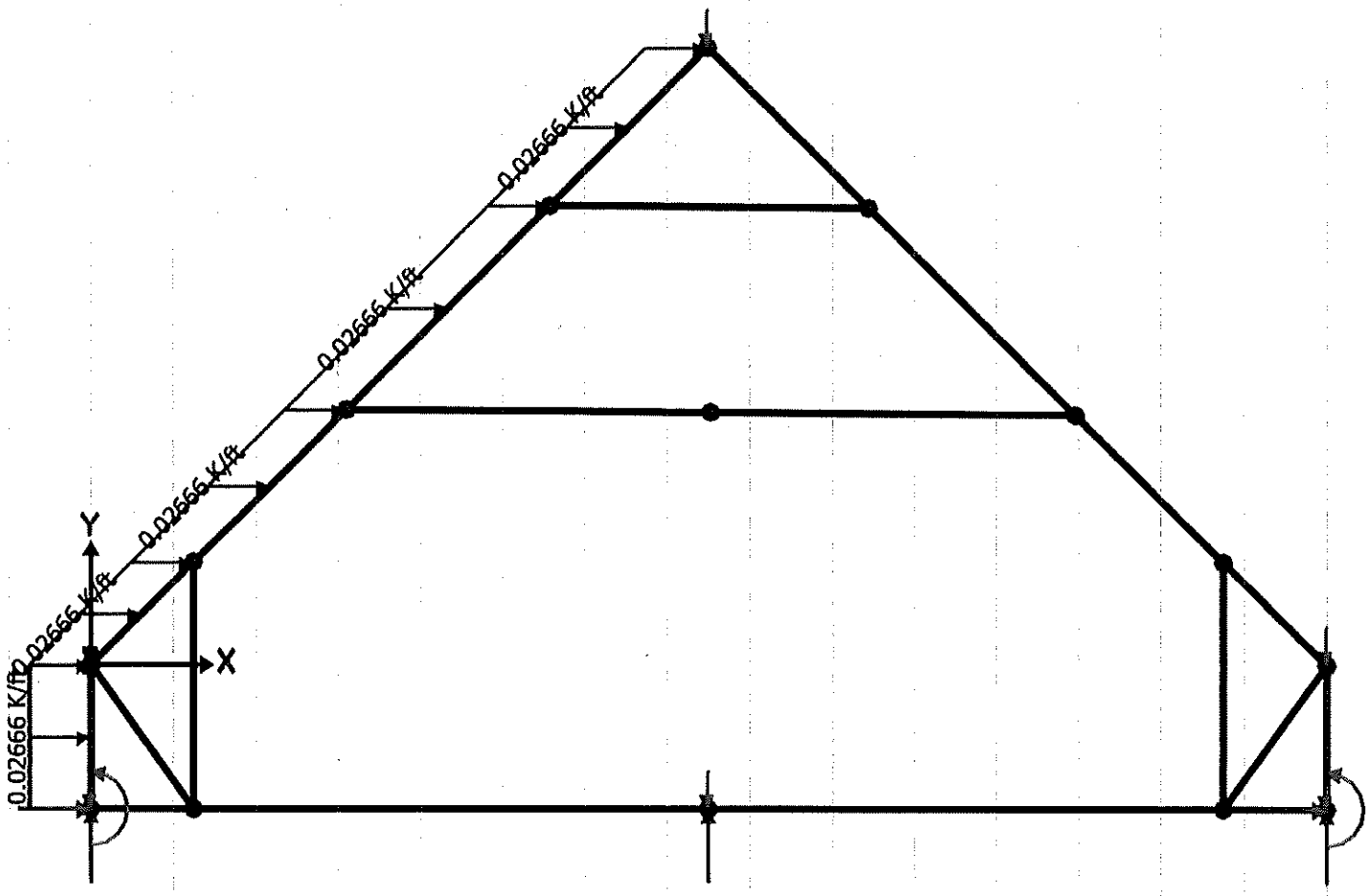
0.02666 K/ft
0.02666 K/ft
0.02666 K/ft
0.02666 K/ft
0.02666 K/ft
0.02666 K/ft
Y
X

Front

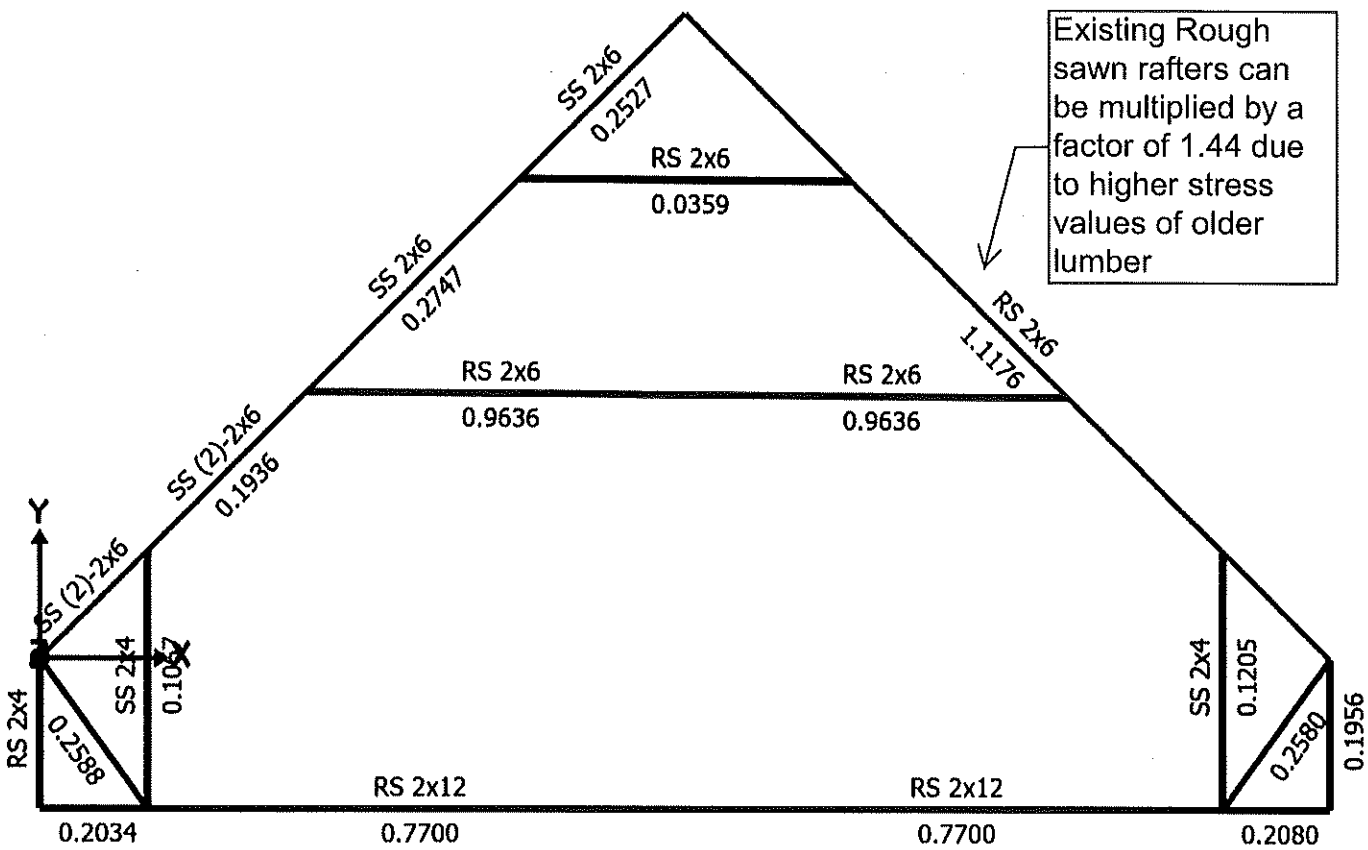
Existing Rough sawn rafters can be multiplied by a factor of 1.44 due to higher stress values of older lumber
SS 2x6
0.2527
RS 2x6
0.0359
SS 2x6
0.2747
RS 2x6
1.1176
RS 2x6
0.9636
RS 2x6
0.9636
SS (2)-2x6
0.1936
SS (2)-2x6
Y
X
SS 2x4
0.1067
RS 2x4
0.2588
SS 2x4
0.1205
0.2580
0.1956
RS 2x12
0.7700
RS 2x12
0.7700
0.2034
0.2080

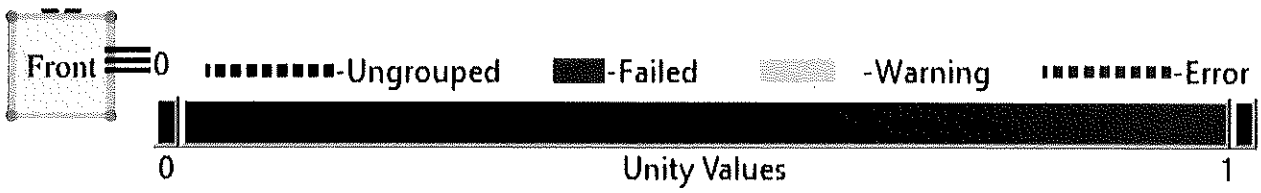
Front
0
-Ungrouped
-Failed
-Warning
-Error
0
Unity Values
1

NATIONAL LUMBER MANUFACTURERS ASSOCIATION—WOOD CONSTRUCTION INFORMATION
International Building, Washington, D. C. Harris Trust Building, Chicago, Ill.

Sept. 1st, 1922

MAXIMUM SPANS FOR JOISTS AND RAFTERS*

The following tables provide a handy means of determining the maximum clear spans for wood joists and rafters. They are based upon a wide range of strength values and cover ordinary load conditions.

The span length should be limited by deflection to prevent cracks where ceilings are covered with some hard, inelastic material such as plaster. Where ceilings are not so covered and where a small amount of sag or spring is not objectionable the span length may be determined by the bending strength of the member instead of by its stiffness.

All spans given in these tables are based on the actual sizes of lumber.

When the allowable stresses for timber are not prescribed in the local building code use the values given below. They are taken from the recommendations of the Forest Products Laboratory, Department of Agriculture, at Madison, Wisconsin, that were officially adopted by the American Society for Testing Materials and the American Railway Engineering Association.

ALLOWABLE UNIT STRESSES FOR STRUCTURAL TIMBER

(Pounds Per Square Inch)

Species of Timber	Modulus of Elasticity	Bending		Compression	
		Stress in Extreme Fibre	Horizontal Shear Stress	Parallel to Grain, "Short Columns"	Perpendicular to Grain
Cedar, Western Red	1,000,000	900	80	700	200
Cedar, Northern White	800,000	750	70	550	175
Chestnut	1,000,000	950	90	800	300
Cypress	1,400,000	1,300	100	1,100	350
Douglas Fir (No. 1 Struct.)	1,600,000	1,600	100	1,200	350
Douglas Fir (No. 2 Struct.)	1,500,000	1,300	90	1,000	300
Douglas Fir, Rocky Mt. Region	1,200,000	1,100	85	800	275
Fir, Balsam	1,000,000	900	70	700	150
Gum, Red	1,200,000	1,100	100	800	300
Hemlock, Western	1,400,000	1,300	75	900	300
Hemlock, Eastern	1,100,000	1,000	70	700	300
Larch, Western	1,300,000	1,200	100	1,100	325
Maple, Sugar or Hard	1,600,000	1,500	150	1,200	500
Maple, Silver or Soft	1,100,000	1,000	100	800	350
Oak, White or Red	1,500,000	1,400	125	1,000	500
Pine, Southern Yellow (Dense)	1,600,000	1,600	125	1,200	350
Pine, Southern Yellow (Sound)	1,500,000	1,300	105	1,000	300
Pine, Eastern White	1,000,000	900	85	750	250
Pine, Western White	1,000,000	900	85	750	250
Pine, Norway	1,200,000	1,100	85	800	300
Redwood	1,300,000	1,200	70	1,000	250
Spruce, Red, White or Sitka	1,200,000	1,100	85	800	250
Spruce, Engelmann	800,000	750	70	600	175
Tamarack, Eastern	1,300,000	1,200	95	1,000	300

MODERN VALUE 900 psi

INCREASE FACTOR $= \frac{1300}{900} = 1.44$

* Prepared by Richard G. Kimbell, primarily as a service to Building Officials.

HRS/ST/HTP/LSTA/LSTI/MST/MSTA/MSTC/MSTI

SIMPSON Strong-Tie

Strap Ties (cont.)

Codes: See p. 11 for Code Reference Key Chart

These products are available with additional corrosion protection. For more information, see p. 14.

SS For stainless-steel fasteners, see p. 21.

SD Many of these products are approved for installation with Strong-Drive® SD Connector screws. See pp. 348–352 for more information.

	Model No.	Ga.	Dimensions (in.) W	Dimensions (in.) L	Fasteners (Total) (in.)	Allowable Tension Loads (DF/SP) (160)	Allowable Tension Loads (SPF/HF) (160)	Code Ref.
	ST2115	20	¾	16⅝	(10) 0.162 x 2½	660	660	IBC, FL, LA
	LSTA9		1¼	9	(8) 0.148 x 2½	740	635	
	LSTA12		1¼	12	(10) 0.148 x 2½	925	795	
	LSTA15		1¼	15	(12) 0.148 x 2½	1,110	955	
	LSTA18		1¼	18	(14) 0.148 x 2½	1,235	1,115	
	LSTA21		1¼	21	(16) 0.148 x 2½	1,235	1,235	
	LSTA24		1¼	24	(18) 0.148 x 2½	1,235	1,235	
	LSTA30	18	1¼	30	(22) 0.148 x 2½	1,640	1,640	
	LSTA36		1¼	36	(24) 0.148 x 2½	1,640	1,640	
	MSTA9		1¼	9	(8) 0.148 x 2½	750	650	
SS	MSTA12		1¼	12	(10) 0.148 x 2½	940	810	
	MSTA15		1¼	15	(12) 0.148 x 2½	1,130	970	
SS	MSTA18		1¼	18	(14) 0.148 x 2½	1,315	1,135	
	MSTA21		1¼	21	(16) 0.148 x 2½	1,505	1,295	
	MSTA24		1¼	24	(18) 0.148 x 2½	1,640	1,460	
	MSTA30	16	1¼	30	(22) 0.148 x 2½	2,050	1,825	
SS	MSTA36		1¼	36	(26) 0.148 x 2½	2,050	2,050	
	MSTA49		1¼	49	(26) 0.148 x 2½	2,020	2,020	
	ST9		1¼	9	(8) 0.162 x 2½	885	765	
	ST12		1¼	11⅝	(10) 0.162 x 2½	1,105	955	
	ST18		1¼	17¾	(14) 0.162 x 2½	1,420	1,335	
	ST22		1¼	21⅝	(18) 0.162 x 2½	1,420	1,420	
	HRS6	12	1⅜	6	(6) 0.148 x 2½	605	530	
	HRS8		1⅜	8	(10) 0.148 x 2½	1,010	880	
	HRS12		1⅜	12	(14) 0.148 x 2½	1,415	1,230	
	ST292	20	2 1/16	9 9/16	(12) 0.162 x 2½	1,260	1,120	
	ST2122		2 1/16	12 13/16	(16) 0.162 x 2½	1,530	1,510	
	ST2215		2 1/16	16 9/16	(20) 0.162 x 2½	1,875	1,875	
	ST6215	16	2 1/16	16 9/16	(20) 0.162 x 2½	2,090	1,910	
	ST6224		2 1/16	23 9/16	(28) 0.162 x 2½	2,535	2,535	
	ST6236	14	2 1/16	33 13/16	(40) 0.162 x 2½	3,845	3,845	
	MSTI26	12	2 1/16	26	(26) 0.148 x 1½	2,745	2,380	
	MSTI36		2 1/16	36	(36) 0.148 x 1½	3,800	3,295	
	MSTI48		2 1/16	48	(48) 0.148 x 1½	5,070	4,390	
	MSTI60		2 1/16	60	(60) 0.148 x 1½	5,070	5,070	
	MSTI72		2 1/16	72	(72) 0.148 x 1½	5,070	5,070	
	HTP37Z	16	3	7	(20) 0.148 x 1½	900	690	
	MSTC28		3	28¼	(36) 0.148 x 3¼	3,460	2,990	
	MSTC40		3	40¼	(52) 0.148 x 3¼	4,735	4,315	
	MSTC52		3	52¼	(62) 0.148 x 3¼	4,735	4,735	
	MSTC66	14	3	65¾	(76) 0.148 x 3¼	5,850	5,850	
	MSTC78		3	77¾	(76) 0.148 x 3¼	5,850	5,850	
	HRS416Z	12	3¼	16	(16) ¼ x 1½ SDS	2,835	2,305	—
	LSTI49	18	3¾	49	(32) 0.148 x 1½	2,970	2,560	IBC, FL, LA
	LSTI73		3¾	73	(48) 0.148 x 1½	4,205	3,840	

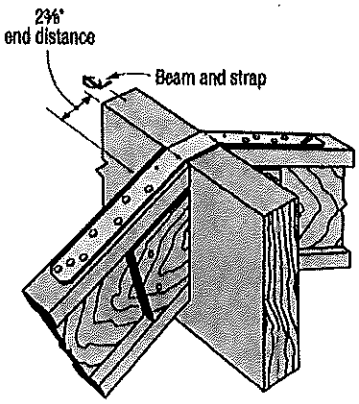

Typical LSTA Installation
(hanger not shown)
Bend strap one time only, max. 12/12 joist pitch.

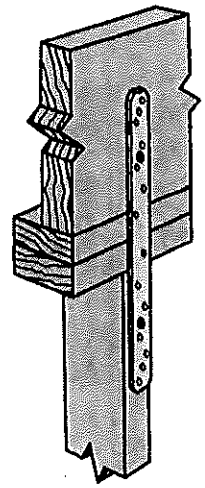

Typical LSTA18 Installation

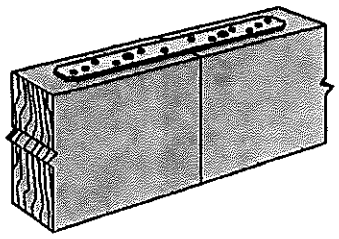

Typical MSTA15 Installation

1. See pp. 266–267 for Straps and Ties General Notes.
2. **Fasteners:** Nail dimensions are listed diameter by length. SDS screws are Simpson Strong-Tie® Strong-Drive SDS Heavy-Duty Connector screws. See pp. 21–22 for fastener information.

HRS/ST/HTP/LSTA/LSTI/MST/MSTA/MSTC/MSTI

Strap Ties

Straps are designed to transfer tension loads in a wide variety of applications.

HRS — Heavy strap designed for installation on the edge of 2x members. The HRS416Z installs with Strong-Drive® SDS Heavy-Duty Connector screws.

HTP — Heavy tie plate designed for installation on the side of 2x4 or larger members.

LSTA and MSTA — Designed for use on the edge of 2x members, with a nailing pattern that reduces the potential for splitting.

LSTI and MSTI — Light and medium straps that are suitable where pneumatic-nailing is necessary through diaphragm decking and wood chord open-web trusses.

MST — High-capacity strap that can be installed with either nails or bolts. Suitable for double 2x member connections or greater.

MSTC — High-capacity strap that utilizes a staggered nail pattern to help minimize wood splitting. Nail slots have been countersunk to provide a lower nail head profile.

Finish: Galvanized. Some products are available in stainless steel, ZMAX® coating or black powder coat (add PC to SKU); contact Simpson Strong-Tie. See Corrosion Information, pp. 12–15.

Installation: Use all specified fasteners; see General Notes

Options: Special sizes can be made to order; contact Simpson Strong-Tie

Codes: See p. 11 for Code Reference Key Chart

MSTC and RPS meet code requirements for reinforcing cut members (16 gauge) at top plate and RPS at sill plate.
International Residential Code® — 2012/2015/2018/2021 R602.6.1
International Building Code® — 2012 2308.9.8; 2015/2018/2021 2308.5.8

(For RPS, refer to p. 309. For CTS218 compression and tension strap, see p. 307.)

MSTI

MST

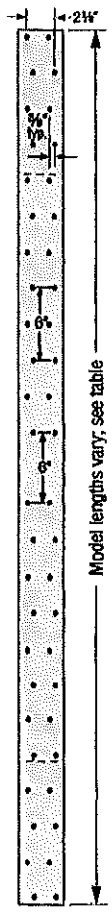

LSTI

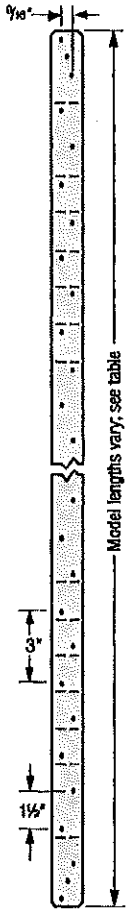

LSTA and MSTA
(pilot holes not shown)

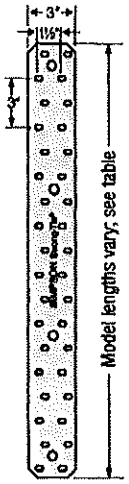

MSTC

ST292, ST2122, ST2215, ST6215, ST6224, ST6236

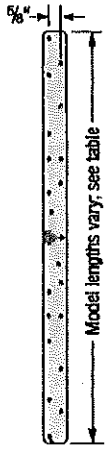

ST9, ST12, ST18, ST22

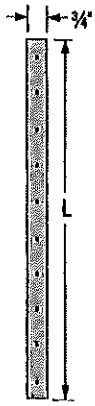

ST2115

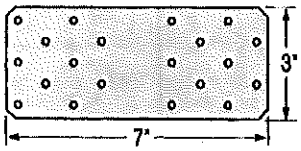

HTP37Z

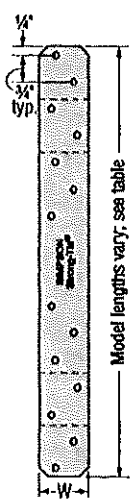

HRS

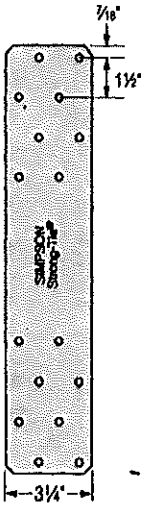

HRS416Z

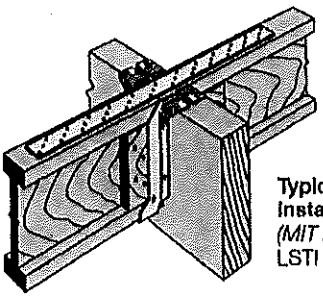
Typical MSTI Installation
(MIT hanger shown)
LSTI similar

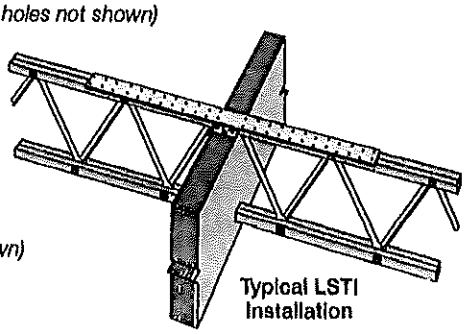
Typical LSTI Installation

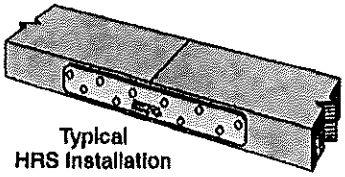
Typical HRS Installation

PASS

DATE:	9/19/2023	COMPANY:	Blodgett Engineering
STRUCALC BUILD:	StruCalc Pro	DESIGNED BY:	Michael Blodgett
CUSTOMER:	James Nicholas	REVIEWED BY:	--
PROJ. ADDRESS:	-- --	PROJECT NAME:	Nicholas
LEVEL:	Main Floor	LOADING:	ASD
MEMBER NAME:	Floor Support Beam	CODE:	2015 International Building Code
MEMBER TYPE:	FLOOR BEAM	NDS:	2015 NDS
MATERIAL:	Structural Composite Lumber		

Global LVL	2.0E 3300Fb LVL	(3) 1.75 X 18	DRY		

Floor Support Beam DIAGRAM

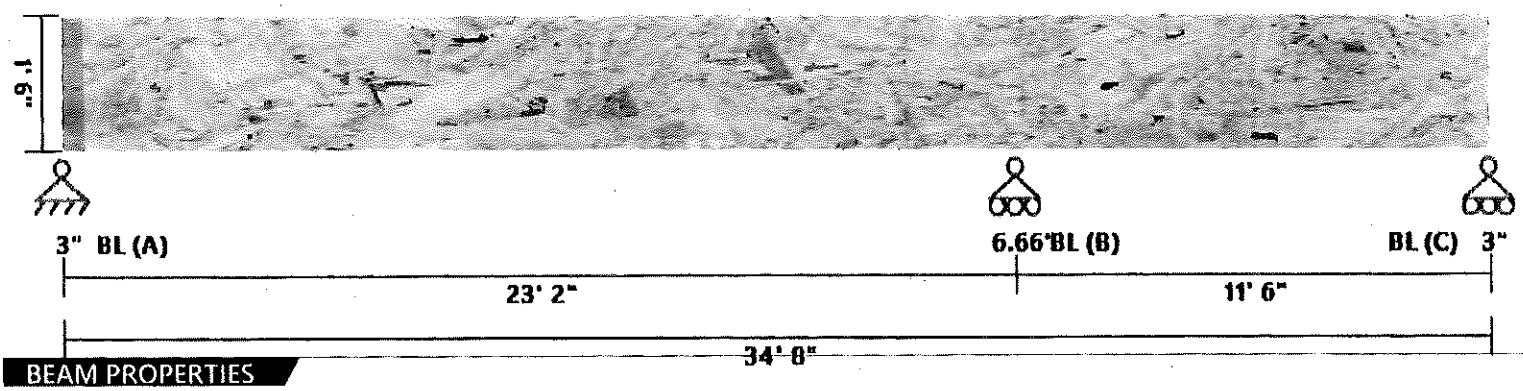

BEAM PROPERTIES

Start (ft): 0 End (ft): 34.667 Member Slope: 0/12 Actual Length (ft): 34.67

Area (in^2)	Ix (in^4)	Iy (in^4)	BSW (lbf/ft)	Lams	Cfn	Kcr Creep Factor
94.5	2551.5	24.12	22.31	3	6.67	1

STRENGTH PROPERTIES

	Fb (psi)	Ft (psi)	Fv (psi)	Fc (psi)	Fc⊥ (psi)	E (psi) x10^3	Emin (psi) x10^3
Base Values	3300	2700	290	2700	575	2000	984.984
Adjusted Values	3432	2700	290	2700	575	2000	985
C_M	1	1	1	1	1	1	1
C_T	1	1	1	1	1	1	1

Bending Adjustment Factors $C_V = 0.94C_r - 1.04$ Volume factor is applied on a load combination basis And is Not reflected in the adjusted values

BEAM DATA

Span	Length (ft)	Unbraced Length (ft) Top	Unbraced Length (ft) Bottom	Beam End Elev. Diff (ft)	CL(Top)	CL(Bottom)	CL(Left)	CL(Right)
1	23.16667	0	23.16667	0	1.00	0.83	1.00	1.00
2	11.5	0	11.5	0	1.00	0.97	1.00	1.00

PASS-FAIL

	PASS/FAIL	MAGNITUDE	STRENGTH	LOCATION (ft)	LOAD COMBO	DURATION FACTOR C
Shear Stress Y (psi)	PASS (60.8%)	176.2	290.0	22.88	D+L	1
Bending Stress Y (psi)	PASS (56.9%)	1619.1	2846.4	22.88	D+L	1
Deflection Y (in)	PASS (75.6%)	0.584 (=L/476)	0.772 (=L/360)	10.4	D+L	1
Bearing Stress (psi)	PASS (97.9%)	563.0	575.0	23.17	D+L	1

REACTIONS

Units for V: lbf Units for M: lbf-ft

Y axis	DEAD	LIVE	TOTAL
A	2347	5411	7758
B	5956	13729	19685
C	343	791	1134

Reaction Location

A B C

LOAD LIST

Type	Name	Left Magnitude	Right Magnitude	Load Start (ft)	Load End (ft)	Load Type	Direction
Uniform (lbf/ft)	Uniform	574.95	574.95	0	34.66667	Live	Y
Uniform (lbf/ft)	Uniform	227.1	227.1	0	34.66667	Dead	Y
Self Weight (lbf/ft)	-	22.31	22.31	0	34.66667	Dead	Y

PASS

DATE:	9/19/2023	COMPANY:	Blodgett Engineering
STRUCALC BUILD:	StruCalc Pro	DESIGNED BY:	Michael Blodgett
CUSTOMER:	James Nicholas	REVIEWED BY:	--
PROJ. ADDRESS:	--	PROJECT NAME:	Nicholas
	--		
LEVEL:	Main Floor	LOADING:	ASD
MEMBER NAME:	Support Post	CODE:	2015 International Building Code
MEMBER TYPE:	COLUMN	NDS:	2015 NDS
MATERIAL:	Structural Composite Lumber		

Weyerhaeuser	1.8E Parallam PSL	(1) 5.25 X 5.25	DRY		

COLUMN PROPERTIES

Start(ft) 0 End(ft): 10

Area (in^2)	Ix (in^4)	Iy (in^4)	BSW (lbf/ft)	Lams	Cfn	Kcr Creep Factor
27.56	63.31	63.31	8.61	1	9	1

STRENGTH PROPERTIES

	Fb (psi)	Ft (psi)	Fv (psi)	Fc (psi)	Fc⊥ (psi)	E (psi) x10^3	Emin (psi) x10^3
Base Values	2500	1995	230	2500	545	1800	914.88
Adjusted Values	2500	1995	230	2500	545	1800	915
C_M	1	1	1	1	1	1	1
C_T	1	1	1	1	1	1	1

Bending Adjustment Factors C_V = 1.1 C_r = 1 Volume factor is applied on a load combination basis And is Not reflected in the adjusted values

COLUMN DATA

Span	Length (ft)	Unbraced Length (ft) X	Unbraced Length (ft) Y	Column End Offset	CP	Ke(X Axis)	Ke(Y Axis)	KeL/d (X Axis)	KeL/d (Y Axis)
1	10	10	10	0	0.52	1.00	1.00	22.86	22.86

PASS-FAIL

	PASS/FAIL	MAGNITUDE	STRENGTH	LOCATION (ft)	LOAD COMBO	DURATION FACTOR C
Compressive Stress (psi)	PASS (55.2%)	717.3	1299.0	0	D+L	1

REACTIONS

Units for V: lbf Units for M: lbf-ft

Z axis	DEAD	LIVE	TOTAL
A	6042	13729	19771
B	0	0	0

Reaction Location

A B

LOAD LIST

Type	Name	Left Magnitude	Right Magnitude	Load Start (ft)	Load End (ft)	Load Type	Direction
Self Weight (lbf/ft)	-	8.61	8.61	0	10	Dead	Z

LINKED LOAD LIST

Type	Member	Support	Left Magnitude	Right Magnitude	Load Start (ft)	Load End (ft)	Load Type	Direction
Axial (lbf)	Floor Support Beam	B	13729.18	-13729.18	10	10	Live	Z
Axial (lbf)	Floor Support Beam	B	-5955.699	-5955.699	10	10	Dead	Z

SIMPSON Strong-Tie

PB/PBS

Regular and Standoff Post Bases

The PBS features a 1" standoff height. It reduces the potential for decay at post and column ends.

Material: PB — 12 gauge; PBS — see table

Finish: Galvanized. Some products available in ZMAX® or HDG coating; see Corrosion Information, pp. 12–15.

Installation:

- Use all specified fasteners; see General Notes.
- Install either nails or bolts.
- Post bases do not provide adequate resistance to prevent members from rotating about the base and therefore are not recommended for non-top-supported installations (such as fences or unbraced carports).
- PB — Holes are provided for installation with either 0.162" x 3½" nails or ½" bolts for PB66 and PB66R; all other models use 0.162" x 3½" nails only. A 2" minimum sidecover is required to obtain the full load.
- PBS — Embed into wet concrete up to the bottom of the 1" standoff base plate. A 2" minimum side cover is required to obtain the full load. Holes in the bottom of the straps allow for free concrete flow.

Codes: See p. 11 for Code Reference Key Chart

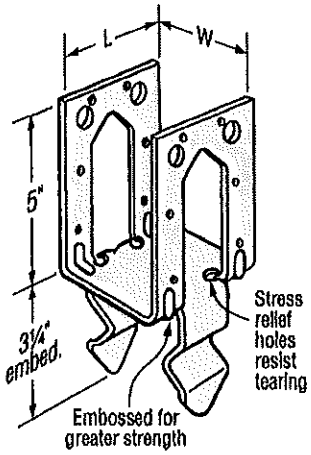

PB

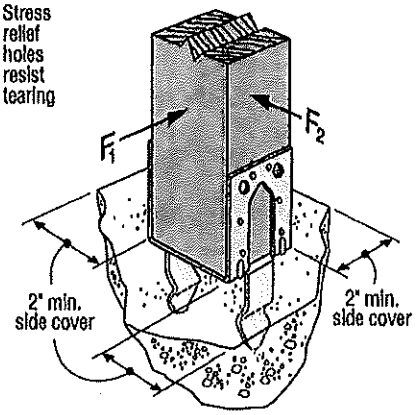

Typical PB Installation

These products are available with additional corrosion protection. For more information, see p. 14.

Model No.	Dimensions (in.) W	Dimensions (in.) L	Fasteners: Nails (in.)	Fasteners: Machine Bolts	Allowable Loads (160) Uncracked Uplift	Allowable Loads (160) Cracked Uplift	Download (100)	Code Ref.
Wind and Seismic Design Category A&B								
PB44	3 9/16	3¼	(12) 0.162 x 3½	N/A	850	850	12,685	IBC, FL, LA
PB44R	4	3¼	(12) 0.162 x 3½	N/A	850	850	12,685	
PB46	5½	3¼	(12) 0.162 x 3½	N/A	850	850	22,445	
PB66	5½	5¼	(12) 0.162 x 3½	(2) ½" dia.	850	850	25,270	
PB66R	6	5¼	(12) 0.162 x 3½	(2) ½" dia.	850	850	25,270	
Seismic Design Category C–F								
PB44	3 9/16	3¼	(12) 0.162 x 3½	N/A	850	850	12,685	IBC, FL, LA
PB44R	4	3¼	(12) 0.162 x 3½	N/A	850	850	12,685	
PB46	5½	3¼	(12) 0.162 x 3½	N/A	850	850	22,445	
PB66	5½	5¼	(12) 0.162 x 3½	(2) ½" dia.	850	850	25,270	
PB66R	6	5¼	(12) 0.162 x 3½	(2) ½" dia.	850	850	25,270	

1. Loads may not be increased for duration of load.
2. Concrete shall have a minimum compressive strength of f'_c = 2,500 psi.
3. Multiply Seismic and Wind ASD uplift and lateral load values by 1.43 or 1.67, respectively, to obtain LRFD capacities.
4. In accordance with IBC, Section 1613.1, detached one- and two-family dwellings in Seismic Design Category (SDC) C may use "Wind and SDC A&B" allowable loads.
5. Downloads shall be reduced where limited by capacity of the post.
6. For lateral loads for all PB models: F_1 allowable = 765 lb. F_2 allowable = 1,325 lb.
7. Designer is responsible for concrete design.
8. Structural composite lumber columns have sides that show either the wide face or the edges of the lumber strands/veneers known as the narrow face. Values in the tables reflect installation into the wide face. See technical bulletin T-C-SCLCLM at **strongtie.com** for load reductions resulting from narrow-face installations.
9. **Fasteners:** Nail dimensions are listed diameter by length. See pp. 21–22 for fastener information.

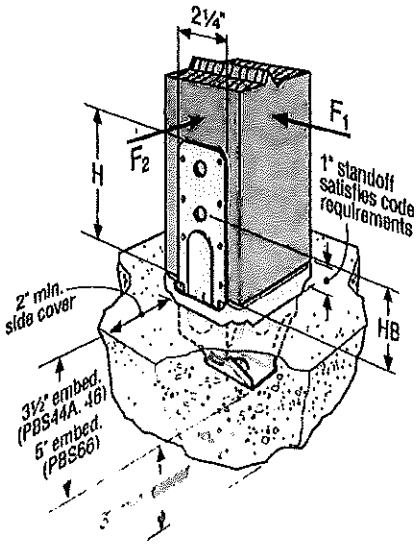

Typical PBS44A Installation

BLODGETT ENGINEERING LLC
STRUCTURAL CONSULTING ENGINEERS
W169 N10815 Redwood Lane
Germantown, WI 53022
blodgetteng@wi.rr.com
Tel/Fax: 262.293.9923

JOB _____
SHEET NO. _____ OF _____
CALCULATED BY _____ DATE _____

FOOTING FOR NEW POST

P = 19771 # SOIL CAPACITY = 2000 psf

$A_{REQ'D} = \frac{19771}{2000} = 9.88$ SF ≅ 3.14' EACH SIDE

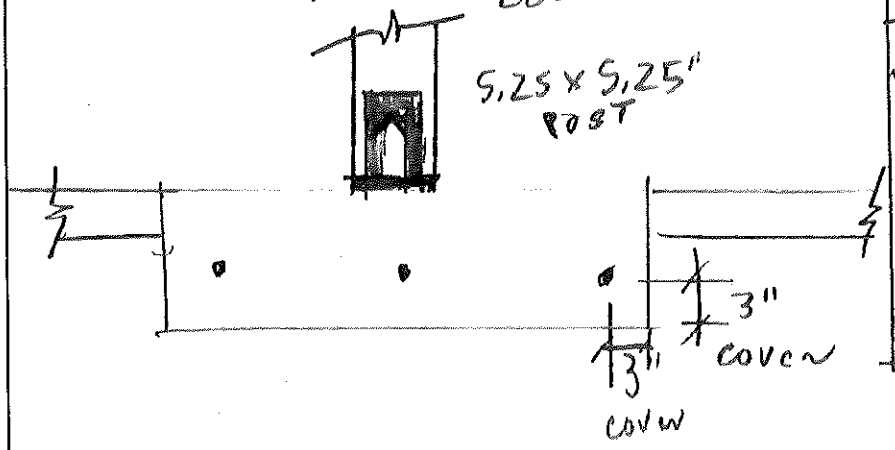

USE: 3.25' x 3.25' x 12" FOOTING

W/ (3) # 3 BARS BOTH WAYS

PASS

DATE:	9/19/2023	COMPANY:	Blodgett Engineering
STRUCALC BUILD:	StruCalc Pro	DESIGNED BY:	Michael Blodgett
CUSTOMER:	James Nicholas	REVIEWED BY:	--
PROJ. ADDRESS:	-- --	PROJECT NAME:	Nicholas
LEVEL:	Main Floor	LOADING:	
MEMBER NAME:	Footing for post	CODE:	2015 International Building Code
MEMBER TYPE:	ISOLATED FOOTING	ACI:	ACI 318-14
MATERIAL:	Concrete		

3.25 (ft) X 3.25 (ft) X 12 (in)	Soil Depth TOF: 0 (ft)	(3) #5 Long, (3) #5 Short

Footing for post DIAGRAMS

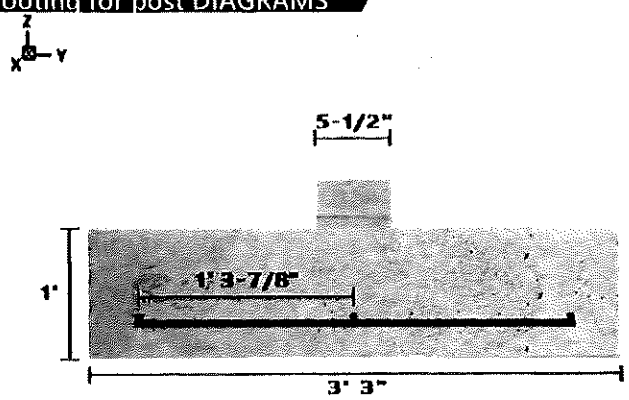

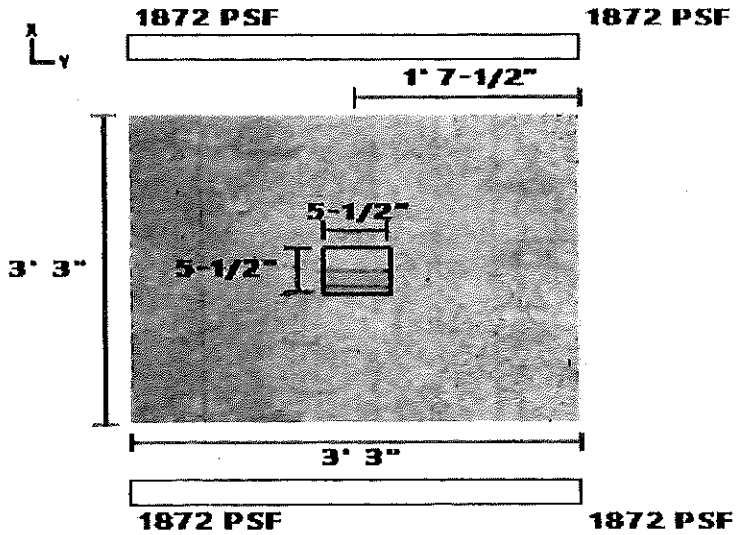

MATERIAL PROPERTIES

FOOTING

fc' (psi)	Ec (psi)	Density (lbf/ft³)	Width (ft)	Length (ft)	Depth (in)	Volume (ft³)
3000	3155924	145	3.25	3.25	12	10.56

CALCULATION VARIABLES

Bo (in)	Φ-X	Φ-Y
55.5	0	0

COLUMN

Width (in)	Length (in)	Material	Offset (in)
5.5	5.5	Wood	0

SOIL

Bearing Strength (lbf/ft²)	Density (lbf/ft³)	Cohesion	Friction Angle	Depth (ft)	Rankine Coefficient (Kp)
2000	140	0	30	0	3

REBAR

Bar Size #	# Bars Long	# Bars Short	fy (psi)	Es (psi)
5	3	3	60000	2.9E+07

PASS-FAIL

	PASS/FAIL	MAGNITUDE	STRENGTH	LOAD COMBO
Soil Bearing Pressure (lbf/ft²)	PASS (93.6%)	1871.8	2000.0	D+L
Two-Way Shear (Punching) (lbf)	PASS (38.3%)	29216.9	76376.5	1.2D+1.6L+0.5Lr
One-Way Shear X (lbf)	PASS (23.4%)	6274.1	26835.0	1.2D+1.6L+0.5Lr
Moment X (lbf-ft)	PASS (98.4%)	8757.7	8900.5	1.2D+1.6L+0.5Lr
One-Way Shear Y (lbf)	PASS (23.4%)	6274.1	26835.0	1.2D+1.6L+0.5Lr
Moment Y (lbf-ft)	PASS (98.4%)	8757.7	8900.5	1.2D+1.6L+0.5Lr
Crushing (psi)	PASS (58.3%)	965.8	1657.5	1.2D+1.6L+0.5Lr

LOAD LIST

Type	Name	Left Magnitude	Right Magnitude	Load Start (ft)	Load End (ft)	Load Type	Direction

LINKED LOAD LIST

Type	Member	Support	Left Magnitude	Right Magnitude	Load Start (ft)	Load End (ft)	Load Type	Direction
Point (lbf)	Support Post	A	13729.18	-	0	-	Live	Z
Point (lbf)	Support Post	A	6041.832	-	0	-	Dead	Z