City of Milwaukee

City Hall
200 East Wells Street
Milwaukee, WI 53202

Meeting Agenda

ZONING, NEIGHBORHOODS & DEVELOPMENT COMMITTEE

ALD. JAMES WITKOWIAK, CHAIR
Ald. Willie Wade, Vice-Chair
Ald. Michael Murphy, Ald. Robert Bauman, and Ald. T. Anthony Zielinski
Staff Assistant, Linda Elmer, 286-2232, Fax: 286-3456, lelmer@milwaukee.gov
Legislative Liaison, Jeffrey Osterman, 286-2262, joster@milwaukee.gov

Tuesday, November 16, 2010 | **9:00 AM** | **Room 301-B, City Hall**

1. **100262** A substitute ordinance establishing a pedestrian mall to be known as “Erie Street Plaza” in East Erie Street, adjacent to the harbor entrance, in the 4th Aldermanic District.

Sponsors: THE CHAIR

Attachments:
- Cover Letter
- Erie Street Pedestrian Mall Map
- City Plan Commission Letter
- Hearing Notice List

2. **100768** A substitute ordinance relating to a change in zoning from Industrial-Light to Industrial-Heavy, to facilitate industrial expansion of Integrated Mail, Inc., on land located north of West Hopkins Street and east of North 35th Street, in the 1st Aldermanic District.

Sponsors: Ald. Hamilton

Attachments:
- Site Map.pdf
- Proposed Zoning Change Map.pdf
- City Plan Commission Letter.docx
- Affadavit for Zoning Change.pdf
- Hearing Notice List

3. **100766** A substitute ordinance relating to the Second Amendment to a Detailed Planned Development known as RGS Warehouse, to allow for site plan modifications, on lands located on the west side of South 6th Street and north of West College Avenue, in the 13th Aldermanic District.

Sponsors: Ald. Witkowski

Attachments: Exhibit A as of 11-8-10.pdf
Exhibit A Continued as of 11-8-10.pdf
Site Photos.pdf
Proposed Zoning Change Map.pdf
City Plan Commission Letter.docx
Affadavit for Zoning Change.pdf
Hearing Notice List

4. **090919** A substitute ordinance to establish a Development Incentive Zone on land located generally along the east side of South 27th Street between West Howard Avenue and West Loomis Road, in the 13th Aldermanic District.

Sponsors: Ald. Witkowski

Attachments: Exhibit A.pdf
Exhibit B.pdf
Development Incentive Zone Map.pdf
City Plan Commission Letter.doc
Hearing Notice List

5. **100737** Resolution authorizing the execution of a Cooperation Agreement by and between the City of Milwaukee and the Redevelopment Authority of the City of Milwaukee for refinancing the Redevelopment Authority's Series 2001 Revenue Bonds and for financing The South End capital improvements project of Milwaukee World Festivals, Inc., in the 4th Aldermanic District.

Sponsors: THE CHAIR

Attachments: Department of City Development Cover Letter.doc
Hearing Notice List

9:30 A.M.

6. **100639** A substitute ordinance relating to registration of vacant buildings.

Sponsors: Ald. Hines Jr.

Attachments: Hearing Notice List

This meeting will be webcast live at www.milwaukee.gov/channel25.

City of Milwaukee

200 E. Wells Street
Milwaukee, Wisconsin 53202

Legislation Details (With Text)

File #:	100262 **Version:** 1		
Type:	Ordinance	**Status:**	In Committee
File created:	6/15/2010	**In control:**	ZONING, NEIGHBORHOODS & DEVELOPMENT COMMITTEE
On agenda:		**Final action:**	
Effective date:			
Title:	A substitute ordinance establishing a pedestrian mall to be known as “Erie Street Plaza” in East Erie Street, adjacent to the harbor entrance, in the 4th Aldermanic District.		
Sponsors:	THE CHAIR		
Indexes:	MALLS		
Attachments:	Cover Letter, Erie Street Pedestrian Mall Map, City Plan Commission Letter, Hearing Notice List		

Date	Ver.	Action By	Action	Result	Tally
6/15/2010	0	COMMON COUNCIL	ASSIGNED TO		
11/9/2010	1	ZONING, NEIGHBORHOODS & DEVELOPMENT COMMITTEE	HEARING NOTICES SENT		

powered by Legistar™

Number
100262
Version
SUBSTITUTE 1
Reference

Sponsor
THE CHAIR
Title
A substitute ordinance establishing a pedestrian mall to be known as “Erie Street Plaza” in East Erie Street, adjacent to the harbor entrance, in the 4th Aldermanic District.
Sections
113-20 cr
...Analysis
This ordinance establishes a pedestrian mall in East Erie Street, adjacent to the harbor entrance.
Body
The Mayor and Common Council of the City of Milwaukee do ordain as follows:

Part 1. Section 113-20 of the code is created to read:

113-20. Erie Street Plaza Pedestrian Mall. 1. CREATED. In accordance with s. 66.0905, Wis. Stats., a pedestrian mall is established in an area previously used for vehicular thoroughfare in East Erie Street adjacent to the harbor entrance. The designated area shall be limited to pedestrian users and to emergency, public works maintenance and utility transportation vehicles.

2. AREA AND LOCATIONS. The area and locations included in the pedestrian mall established under this section are specifically described as follows: That part of East Erie Street in the Northwest 1/4 of Section 33, Township 7 North, Range 22 East described as follows: Commencing at the southeast corner of Lot 3 of Certified Survey Map No. 7370; thence South 33°19’02” East, along the southeasterly extension of the easterly line of Lot 3 aforesaid, 21.67 feet to a point lying 20.00 feet southeasterly of, as measured normal to, the southerly line of Lot 3, said point being the point of beginning of the land to be described; thence South 34°16’47” West, parallel to said southerly line, 110.57 feet to a point in the westerly line of said Certified Survey Map, said westerly line also being the established dock line of the east bank of the Milwaukee River; thence South 33°18’29” East, along said westerly line and said established dock line, 11.45 feet to a point; thence South 67°20’57” East, along said westerly line and said established dock line, 47.50 feet to a point in the southerly line of said Certified Survey Map; thence North 85°48’29” East, along said southerly line, 86.59 feet to a point in the southeasterly extension of the easterly line of Lot 3; thence North 33°19’02” West, along said southeasterly extension, 135.09 feet to the point of beginning. Said area contains 8,420 square feet or 0.1933 acres of land.

3. MAP ON FILE. A map of the pedestrian mall area described in sub. 2 is on file with the city clerk.
LRB
APPROVED AS TO FORM

_____
Legislative Reference Bureau
Date:_____
Attorney

IT IS OUR OPINION THAT THE ORDINANCE
IS LEGAL AND ENFORCEABLE

_____
Office of the City Attorney
Date:_____
Requestor

Drafter
DMB
6/28/2010
LRB123296-2
JDO
11/09/2010

GRANT F. LANGLEY
City Attorney

RUDOLPH M. KONRAD
LINDA ULISS BURKE
VINCENT D. MOSCHELLA
Deputy City Attorneys

CITY OF MILWAUKEE
Office of the City Attorney

THOMAS O. GARTNER
BRUCE D. SCHRIMPF
ROXANE L. CRAWFORD
SUSAN D. BICKERT
STUART S. MUKAMAL
THOMAS J. BEAMISH
MAURITA F. HOUREN
JOHN J. HEINEN
DAVID J. STANOSZ
SUSAN E. LAPPEN
JAN A. SMOKOWICZ
PATRICIA A. FRICKER
HEIDI WICK SPOERL
KURT A. BEHLING
GREGG C. HAGOPIAN
ELLEN H. TANGEN
MELANIE R. SWANK
JAY A. UNORA
DONALD L. SCHRIEFER
EDWARD M. EHRLICH
LEONARD A. TOKUS
VINCENT J. BOBOT
MIRIAM R. HORWITZ
MARYNELL REGAN
G. O'SULLIVAN-CROWLEY
KATHRYN Z. BLOCK
MEGAN T. CRUMP
ELOISA DE LEÓN
ADAM B. STEPHENS
KEVIN P. SULLIVAN
BETH CONRADSON CLEARY
THOMAS D. MILLER
HEIDI E. GALVÁN
Assistant City Attorneys

June 11, 2010

VIA: E-MAIL

Jim Owczarski, City Clerk's Office
200 East Wells Street, Room 205
Milwaukee, WI 53202

Re: Introduction of Council Files for July Council Cycle
Regarding Catalano Square and Erie Street Plaza Leases

Dear Mr. Owczarski:

I write to request your assistance with the introduction and administration of three files pertaining to the Catalano Square and Erie Street Plaza Leases. They are:

1. Resolution approving a lease with the Board of Business Improvement District No. 2 for the Catalano Square property at 138 North Broadway, in the 4th Aldermanic District. (See previous File # 091583 directing negotiations).
2. Ordinance to establish a pedestrian mall to be known as "Erie Street Plaza" in East Erie Street, adjacent to the harbor entrance, in the 4th Aldermanic District.
3. Resolution to approve a lease with the Board of Business Improvement District No. 2 for the Erie Street Plaza property located near 695 E. Erie Street, in the 4th Aldermanic District. (See previous File # 100114 directing negotiations).

The establishment of a pedestrian mall is a necessary component of the lease agreement requested by the Common Council for Erie Street Plaza, and it must precede approval of the lease, so I would ask that the various agenda items be ordered with that in mind.

The resolutions, ordinance text, and fiscal notes will follow.

Please send notices of Council and Committee meetings to the following:

1. Ald. Robert J. Bauman
2. Ghassan Korban; DPW
3. Elaine Miller; DCD
4. Danielle Bergner

Thank you very much. Please call if you have questions or comments.

Very truly yours,

DANIELLE M. BERGNER
Assistant City Attorney

DMB
c: Ald. Robert Bauman (via e-mail)
Ghassan Korban (via e-mail)
Elaine Miller (via e-mail)

158721

N.W. 1/4 SEC. 33, T.7N., R.22E. 429

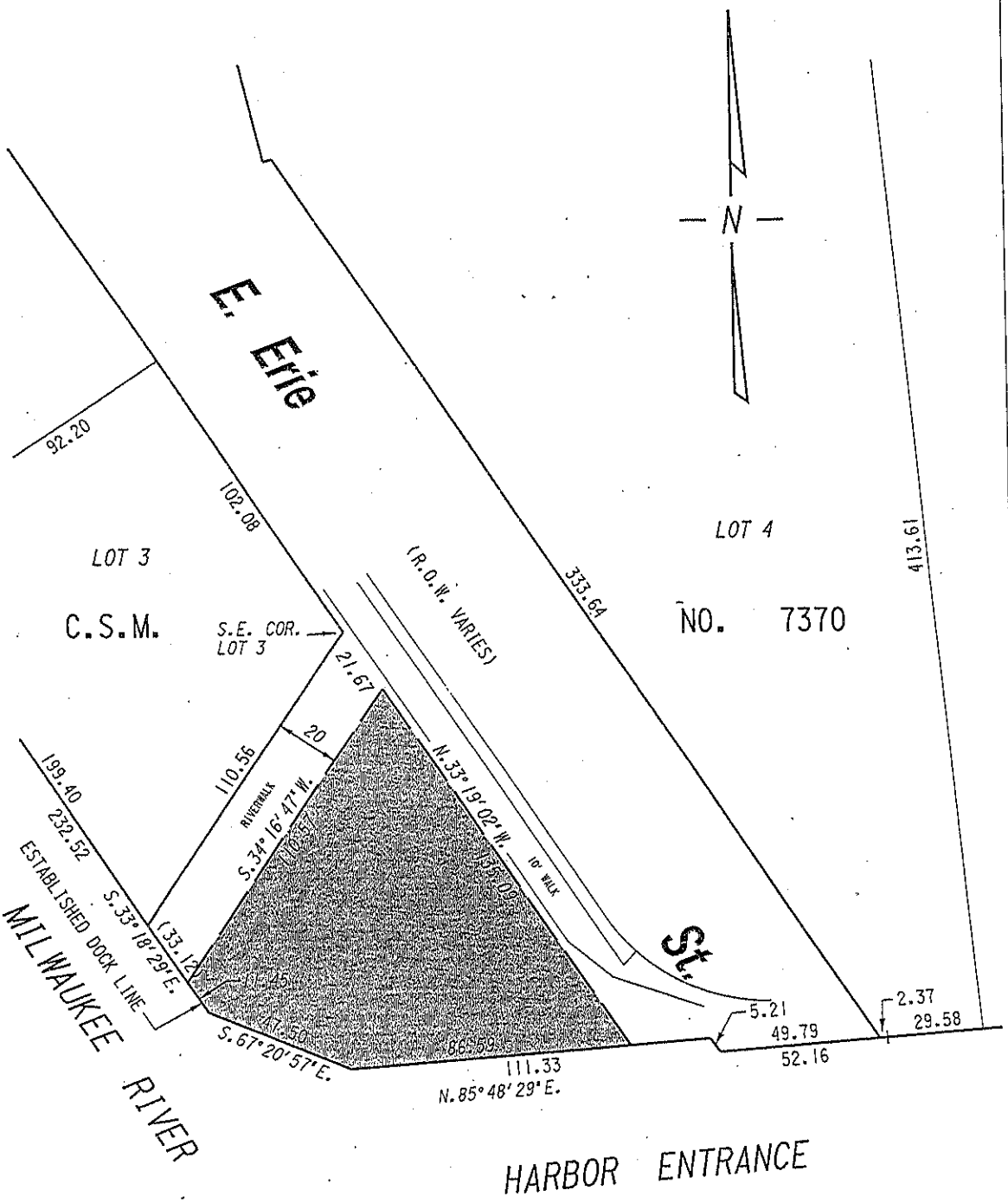

PUBLIC STREET RIGHT-OF-WAY TO BE DESIGNATED AS A PEDESTRIAN MALL

FILE NO. 100262

INFRASTRUCTURE SERVICES DIVISION

MILWAUKEE, WISCONSIN

ASSIGNED TO: W.E. FUCHS
DRAWN BY: W.E.F.
PROJECT/GRANT NO.:
APPROVED BY:

CH'K'D. BY: W.E. FUCHS
DATE: JUNE 21, 2010
SCALE: 1" = 40'

Marcia Cornell
CENTRAL DRAFTING & RECORDS MANAGER

CITY ENGINEER

w:\eng\row\opening\Erie St Plaza.dgn

August 23, 2010

To the Honorable Members of the
Zoning, Neighborhoods and Development Committee
City of Milwaukee
City Hall, Room 205

Dear Committee Members:

File No. 100262 establishes a pedestrian mall to be known as “Erie Street Plaza” in East Erie Street, adjacent to the harbor entrance, in the 4th Aldermanic District.

In accordance with s. 66.0905, Wis. Stats., a pedestrian mall will be established in an area previously used for vehicular thoroughfare in East Erie Street adjacent to the harbor entrance. The designated area shall be limited to pedestrian users and to emergency, public works maintenance and utility transportation vehicles.

Since the proposed pedestrian mall is not in conflict with City plans, the City Plan Commission at its regular meeting on August 23, 2010, recommended approval of the subject file.

Sincerely,

Rocky Marcoux
Executive Secretary
City Plan Commission of Milwaukee

Cc: Bunkie Miller

NOTICES SENT TO FOR FILE 100262:

NAME	ADDRESS	DATE NOTICE SENT		
Danielle Bergner	CA	11/9/10		
Ghassan Korban	DPW	x		
Elaine Miller	DCD	x		

City of Milwaukee

200 E. Wells Street
Milwaukee, Wisconsin 53202

Legislation Details (With Text)

File #:	100768 **Version:** 1		
Type:	Ordinance	**Status:**	In Committee
File created:	10/12/2010	**In control:**	ZONING, NEIGHBORHOODS & DEVELOPMENT COMMITTEE
On agenda:		**Final action:**	
Effective date:			
Title:	A substitute ordinance relating to a change in zoning from Industrial-Light to Industrial-Heavy, to facilitate industrial expansion of Integrated Mail, Inc., on land located north of West Hopkins Street and east of North 35th Street, in the 1st Aldermanic District.		
Sponsors:	ALD. HAMILTON		
Indexes:	ZONING, ZONING DISTRICT 01		
Attachments:	Site Map.pdf, Proposed Zoning Change Map.pdf, City Plan Commission Letter.pdf, Affadavit for Zoning Change.pdf, Hearing Notice List		

Date	Ver.	Action By	Action	Result	Tally
10/12/2010	0	COMMON COUNCIL	ASSIGNED TO		
10/14/2010	0	ZONING, NEIGHBORHOODS & DEVELOPMENT COMMITTEE	REFERRED TO		
10/26/2010	1	CITY CLERK	DRAFT SUBMITTED		
11/1/2010	1	CITY CLERK	PUBLISHED		
11/9/2010	1	ZONING, NEIGHBORHOODS & DEVELOPMENT COMMITTEE	HEARING NOTICES SENT		
11/9/2010	1	ZONING, NEIGHBORHOODS & DEVELOPMENT COMMITTEE	HEARING NOTICES SENT		

powered by Legistar™

Number
100768
Version
SUBSTITUTE 1
Reference

Sponsor
ALD. HAMILTON
Title
A substitute ordinance relating to a change in zoning from Industrial-Light to Industrial-Heavy, to facilitate industrial expansion of Integrated Mail, Inc., on land located north of West Hopkins Street and east of North 35th Street, in the 1st Aldermanic District.
Analysis
This zoning change was applied for by Hopkins Development Group, LLC, and will allow for two existing parcels to be reconfigured through a Certified Survey Map ("CSM") with land currently zoned Industrial-Heavy to facilitate the industrial expansion of an existing business (Integrated Mail, Inc). The future CSM parcel cannot have mixed zoning.
Body
Resolved, That the Mayor and Common Council of the City of Milwaukee, do ordain as follows:

Part 1. There is added to the Milwaukee Code of Ordinances a new section to read as follows:

Section 295-801.4.0001. The zoning map is amended to change the zoning for the properties located at:

3478 West Hopkins Street, Tax Key No. 246-9889-110, and 4250 North 35th Street, Tax Key No. 246-9887-100

from Industrial-Light (IL2) to Industrial-Heavy (IH).
Drafter
DCD:VLK:kdc
10/26/10

Integrated Expansion Site and RACM Parcel

The proposed zoning change prevents mixed zoning in a future Certified Survey Map parcel. Integrated Mail Industries (though its affiliate, Hopkins Development Group) is assembling land for expansion of its manufacturing facility at 3410 West Hopkins Street. A second parcel may be used by the Redevelopment Authority to create a stormwater detention area to serve businesses in the 30th Street Industrial Corridor. The IH zoning is appropriate for future development of this area and will facilitate job retention and creation in the corridor.

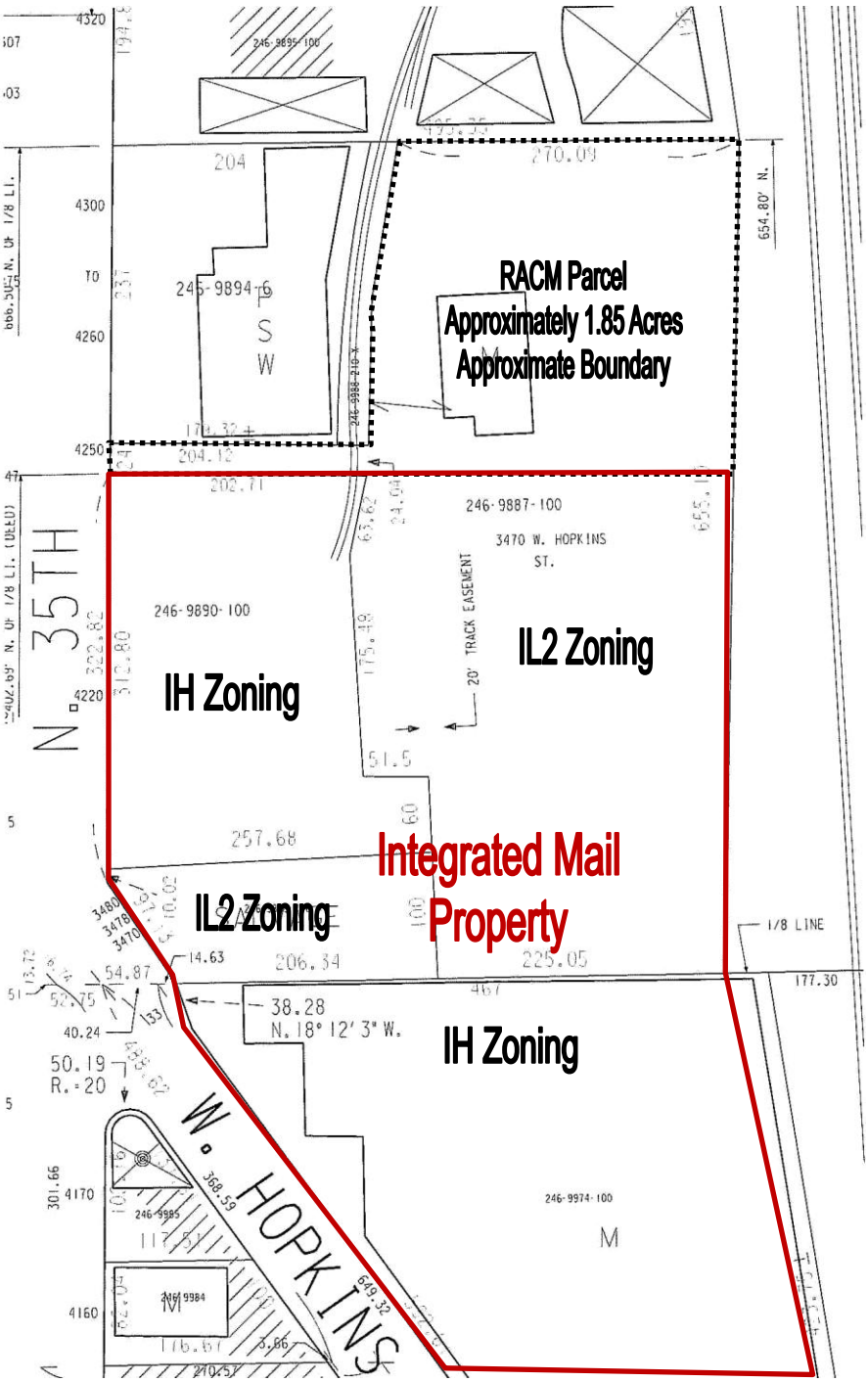

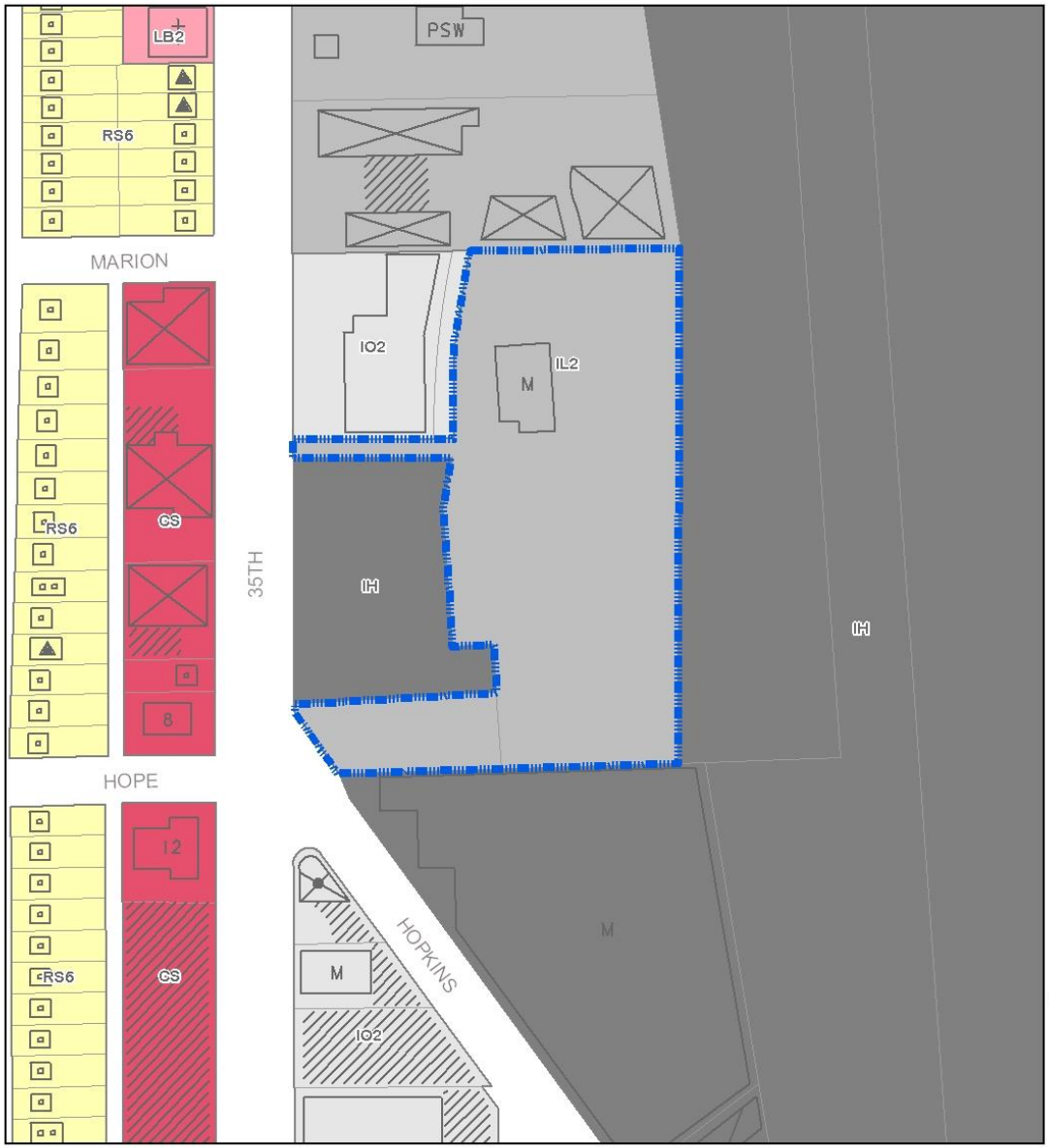

FN 100768
IL2 to IH
November 2010

Proposed Zoning Change

Residential Districts

- Single Family (RS1-6)
- Two-Family (RT1-4)
- Multi-Family (RM1-7)
- Residential and Office (RO1-2)

Commercial Districts

- Neighborhood Shopping (NS1-2)
- Local Business (LB1-2)
- Commercial Service (CS)
- Regional Business (RB1-2)
- Central Business (C9A-C9H)

Industrial Districts

- Industrial - Office (IO)
- Industrial - Light (IL1-2)
- Industrial - Mixed (IM)
- Industrial - Heavy (IH)

Special Districts

- Parks (PK)
- Institutional (TL)
- Planned Development (PD, DPD)
- Redevelopment (RED)

N

0 130 260 520 Feet

Data source: Department of City Development 2010

November 8, 2010

To the Honorable Members of the
Zoning, Neighborhoods and Development Committee
City of Milwaukee
City Hall, Room 205

Dear Committee Members:

File No. 100768 relates to a change in zoning from Industrial Light to Industrial Heavy, on land located north of West Hopkins Street and east of North 35th Street, in the 1st Aldermanic District.

This zoning change was applied for by Hopkins Development Group, LLC, and will allow for two existing parcels to be reconfigured through a Certified Survey Map with land currently zoned Industrial Heavy to facilitate the industrial expansion of an existing business (Integrated Mail, Inc). The future CSM parcel cannot have mixed zoning. Integrated Mail Industries (though its affiliate, Hopkins Development Group) is assembling land for expansion of its manufacturing facility at 3410 West Hopkins Street. A second parcel may be used by the Redevelopment Authority to create a stormwater detention area to serve businesses in the 30th Street Industrial Corridor. The IH zoning is appropriate for future development of this area and will facilitate job retention and creation in the corridor.

These properties are located within the Near North Side Comprehensive Area Plan. The plan's recommendations are consistent with the proposed future expansion of an existing industrial use at this site

On November 8, 2010, a public hearing was held and at that time nobody spoke in opposition to the file. Since the proposed change allows for future expansion of an existing industrial use and is consistent with the Near North Side Comprehensive Area Plan recommendations, the City Plan Commission at its regular meeting on November 8, 2010 recommended approval of the subject file.

Sincerely,

Rocky Marcoux
Executive Secretary
City Plan Commission of Milwaukee

cc: Ald. Ashanti Hamilton

Address of parcel(s): 3478 W. Hopkins St. and 4250 N. 35th St.

Affidavit for Zoning Change

1. POLICY (s. 295-313). Each applicant for a zoning map amendment or approval of a planned development, and each applicant for a use variance or special use permit, shall submit to the city plan commission or the board of zoning appeals, as the case may be, a signed affidavit indicating whether the applicant is: (NOTE: DISCLOSE ALL RELEVANT AND REQUIRED INFORMATION ON A SEPARATE SHEET AND ATTACH TO THIS SHEET UPON SUBMITTAL)

   a. Delinquent in the payment of any property tax, special assessment, special charge or special tax due to the city, provided that all appeals of the tax, assessment or charge have been concluded or the time to appeal has expired. YES [ ] NO [✓]

   b. A party against whom the city has an outstanding judgment, provided that all appeals of the judgment have been concluded or the time to appeal has expired. YES [ ] NO [✓]

   c. A party against whom the city has outstanding health or building and zoning code violations or orders from the commissioner of health or commissioner of neighborhood services that are not actively being abated, provided that all appeals of orders to correct violations have been concluded or the time to appeal has expired. YES [ ] NO [✓]

   d. A party who has been convicted of violating an order of the commissioner of health or commissioner of neighborhood services within the past year, provided that all appeals of the conviction have been concluded or the time to appeal has expired. YES [ ] NO [✓]

   e. The owner of premises found to be in violation of s. 80-10 to whom the commissioner of neighborhood services has charged the costs of police enforcement pursuant to s. 80-10-4, provided that all appeals of these charges have been concluded or the time to appeal has expired. YES [ ] NO [✓]

2. NON-INDIVIDUAL APPLICANTS

   a. Corporations. If the applicant is a corporation, a duly authorized officer or director of the corporation shall submit the affidavit required by sub. 1. The affidavit shall attest to whether each officer and director of the corporation as well as each shareholder owning 5% or more of voting stock, fits any of the descriptions in sub. 1-a to e.

   b. Partnerships. If the applicant is a partnership or limited partnership, a duly authorized partner, general partner or limited partner shall submit the affidavit required by sub 1. The affidavit shall attest to whether each partner, general partner and limited partner fits any of the descriptions in sub. 1-a to e.

   c. Limited Liability Companies. If the applicant is a limited liability company, a duly authorized member or manager of the company shall submit the affidavit required by sub. 1. The affidavit shall attest to whether each member and manager of the company fits any of the descriptions in sub. 1-a to e.
   No member or manager fits any of the above.

   d. Nonstock Corporations. If the applicant is a nonstock corporation, a duly authorized officer or director of the corporation shall submit the affidavit required by sub. 1. The affidavit shall attest to whether each officer and director of the corporation fits any of the descriptions in sub. 1-a to e.

Dated at Milwaukee, Wisconsin, this 28th day of September, 2010.

Bruce Arbit

Petitioner (signature)

Bruce Arbit, Managing Member

(print name, relationship to project)

Hopkins Development Group, LLC

Subscribed and sworn to before me
This 27th day of September, 2010

Notary Public, State of Wisconsin
My commission expires: 10/27/13

ALAN B. WALKOWSKI NOTARY PUBLIC STATE OF WISCONSIN

Office Use Only: File no. 100768

NOTICES SENT TO FOR FILE 100768:

NAME	ADDRESS	DATE NOTICE SENT		
Rocky Marcoux	DCD	11/9/10		
See Attached List		✓		
Ald. Hamilton		✓		

Étiquettes faciles à peler
Utilisez le gabarit AVERY® 5960™
Sens de chargement
Consultez la feuille d'instruction
www.avery.com
1-800-GO-AVERY

ALEX & SUSIE STALLWORTH
4246 N 36TH ST
MILWAUKEE WI 53216

ANTHONY & ALICIA VIVIANS
4224 N 36TH ST
MILWAUKEE WI 53216

ARESTINE LINWOOD
4260 N 36TH ST
MILWAUKEE WI 53216

BEE BUS LINE, INC
4330 N 35TH ST
MILWAUKEE WI 53216

CAROM HOLDINGS LLC
PO BOX 16814
MILWAUKEE WI 53216

CASH REGISTER SERVICE CO INC
4247 N 35TH ST
MILWAUKEE WI 53216

CATHERINE M VOELTNER
4270 N 36TH ST
MILWAUKEE WI 53216

CLYMANESTRIA CLAY
4214 N 36TH ST
MILWAUKEE WI 53216

CMC HEARTLAND PARTNERS
547 W JACKSON BL STE 1510
CHICAGO IL 60606

DAY CARE SERV FOR CHILDREN
PO BOX 16559
MILWAUKEE WI 53216

DORIS ANN RUSS, ELLIOT RUSS
4256 N 36TH ST
MILWAUKEE WI 53216

HL PATTERSON, EL PATTERSON
2034 N 12TH ST
MILWAUKEE WI 53205

HOPKINS DEV GROUP LLC
600 A B DATA DR
MILWAUKEE WI 53217

JAMES MALLETT
3525 W HOPE AV
MILWAUKEE WI 53216

JEFFREY R KIRCHMAN
P O BOX 26545
WAUWATOSA WI 53226

JOEL J KINLOW
3124 W SHERIDAN AVE
MILWAUKEE WI 53209

JOSEPH CAMILLO JR
4275 N 35TH ST
MILWAUKEE WI 53216

MADELINE BORGES
PO BOX 242251
MILWAUKEE WI 53224

PREMIER PROPERTIES UNLTD LLC
4726 HUNTER LA
NEW BERLIN WI 53151

SHERI R BRAWLEY
6556 N BOURBON ST
MILWAUKEE WI 53224

SOO LINE C/O REAL ESTATE
501 MARQUETTE AVE STE 1525
MINNEAPOLIS MN 554021243

SUB MOTORS C/O USA ANODIZING
4152 N 35TH ST
MILWAUKEE WI 53216

T GARRISON & J GARRISON
4218 N 36TH STREET
MILWAUKEE WI 53216

THOMAS C LANDGRAF & JEAN HW
4170 N 35TH ST
MILWAUKEE WI 53216

TOMMIE KING & SUSAN HW
4208 N 36TH ST
MILWAUKEE WI 52316

WI HOUSING & ECON DEV AUTH
201 W WASHINGTON AVE #700
MADISON WI 53701

E MILLER
CITY REAL ESTATE

STEVE CHERNOFF
GODFREY & HAHN
780 N WATER STREET
MILWAUKEE WI 53202

Cover Office — TN 100768

Easy Peel Labels
Use Avery® TEMPLATE 5960™
Feed Paper
See Instruction Sheet for Easy Peel Feature
AVERY® 5960™

City of Milwaukee

200 E. Wells Street
Milwaukee, Wisconsin 53202

Legislation Details (With Text)

File #:	100766 **Version:** 1		
Type:	Ordinance	**Status:**	In Committee
File created:	10/12/2010	**In control:**	ZONING, NEIGHBORHOODS & DEVELOPMENT COMMITTEE
On agenda:		**Final action:**	
Effective date:			

Title: A substitute ordinance relating to the Second Amendment to a Detailed Planned Development known as RGS Warehouse, to allow for site plan modifications, on lands located on the west side of South 6th Street and north of West College Avenue, in the 13th Aldermanic District.

Sponsors: ALD. WITKOWSKI

Indexes: ZONING, ZONING DISTRICT 13

Attachments: Exhibit A as of 11-8-10.pdf, Exhibit A Continued as of 11-8-10.pdf, Site Photos.pdf, Proposed Zoning Change Map.pdf, City Plan Commission Letter.pdf, Affadavit for Zoning Change.pdf, Hearing Notice List

Date	Ver.	Action By	Action	Result	Tally
10/12/2010	0	COMMON COUNCIL	ASSIGNED TO		
10/14/2010	0	ZONING, NEIGHBORHOODS & DEVELOPMENT COMMITTEE	REFERRED TO		
10/26/2010	1	CITY CLERK	DRAFT SUBMITTED		
11/1/2010	1	CITY CLERK	PUBLISHED		
11/9/2010	1	ZONING, NEIGHBORHOODS & DEVELOPMENT COMMITTEE	HEARING NOTICES SENT		
11/9/2010	1	ZONING, NEIGHBORHOODS & DEVELOPMENT COMMITTEE	HEARING NOTICES SENT		

powered by Legistar™

Number
100766
Version
SUBSTITUTE 1
Reference
081311
Sponsor
ALD. WITKOWSKI
Title
A substitute ordinance relating to the Second Amendment to a Detailed Planned Development known as RGS Warehouse, to allow for site plan modifications, on lands located on the west side of South 6th Street and north of West College Avenue, in the 13th Aldermanic District.
Analysis
This zoning amendment was requested by Greg and Scott Lindner to permit an increase in trailer and automobile parking, as well as the addition of a guard house at the parking lot entrance, and to make modifications to the fencing, storm water management and landscaping on the site.
Body
The Mayor and Common Council of the City of Milwaukee ("Common Council"), do ordain as follows:

Part 1. There is added to the Milwaukee Code of Ordinances ("Code") a new section to read as follows:

Section 295-907(2)(c).0160.

(1) In accordance with the provisions of Section 295-907(2) of the Code relating to the procedures and establishment of planned development districts, the Common Council approves the subject amended Detailed Planned Development, a copy of which is attached to this Common Council File as Exhibit A which is on file in the office of the City Clerk and made a part as though fully set forth herein.

(2) The zoning map is amended to change the zoning for the property at 6055 South 6th Street, Tax Key No. 688-0001-100.

(3) The requirements set forth in said detailed plan attached to this Common Council File as Exhibit A, constitute the zoning regulations for the area contained in such planned development district described, provided further, that the effect of the approval of such detailed plan is that such plan shall limit and control construction, location, use and operation of all land and structures included within the detailed plan to all conditions and limitations set forth in such detailed plan.

Part 2. Any persons, firm, company or corporation owning, controlling or managing any building or premises wherein or whereon there shall be placed or there exists anything in violation of the terms of this ordinance; or who shall build contrary to the plans or specifications submitted to and approved by the Commissioner of the Department of City Development, or any person, firm, company or corporation who shall omit, neglect or refuse to do any act required in this ordinance shall be subject to the penalties provided in Section 200-19 of the Code.

Part 3. If any section, subsection, sentence, clause, phrase or portion of this ordinance is for any reason held invalid or unconstitutional by any court of competent jurisdiction, such portion shall be deemed a separate, distinct and independent provision, and such holding shall not affect the validity of the remaining portions. The Common Council declares that it would have passed this ordinance and each section, subsection, sentence, clause, phrase or portion irrespective of the fact that any one or more sections, subsections, sentences, clauses or phrases or other portions be declared void or invalid.

Drafter
DCD:VLK:kdc
10/26/10

Lindner Terminals Parking Lot Improvement
File number 100766
2nd Amendment to DPD (RGS Warehouse)
Owners Amended Statement of Intent
For
Milwaukee City Plan Commission

This project is to amend the original plan for a proposed warehouse and develop a fenced lot with controlled access for the parking of approximately 170 semi trailers and 40 automobiles. We will be developing the vacant land that is attached to our existing parking to accommodate our tenant, General Mills requirements for their future growth. In order to meet the trailer parking requirements in the lease we need to modify the setbacks and landscape slightly as shown on the drawings. Every effort is being made so that the proposed landscape plan will be a contender for the Garden District awards next year. In addition, by making the parking lot secure we were able to have the lease extended for five years commencing 1-1-11 with additional extension options. With the addition of employee spaces as shown on the drawing and minor discussions of expansion into the whole property we can only anticipate future employment opportunities and growth as General Mills stays committed to the 6th and Armor facility.

We will amend the storm water management plan to accommodate the additional pavement areas. The property will be accessed through a gate controlled from the new guard shack for food safety as the 250,000 sq. ft. facility is used for the storage of food related products and is also a requirement for the lease between Lindner Logistics and General Mills. We will be moving the entrance to the north end of the property to maximize the parking and improve traffic flow throughout the lot. In addition we will be replacing the existing signage (approximately 6'x 11') and moving it by the new entrance along with adding additional lighting per the attached plan.

The site plan statistics are located in the section C1.1 if the drawings. The building area statistics are as follows:

Total Area	636,085	sq. ft.	100 %
Building	249,518	sq. ft.	39.23%
Paved Area	337,302.85	sq. ft.	53.03%
Green Space	49,264.15	sq. ft.	7.74%

The timing requirement per our lease agreement is to have everything completed by June 7, 2011. We will be meeting the City Plan Commissions standards as follows;

1. The use is permitted under the current zoning, DPD
2. The design standard will be met to satisfy the building requirements for the guard shack and Storm Water Management per the attached drawings
3. The requirements for density is not applicable

4. The space between our structures meets the required separation as shown in the enclosed plans
5. All setbacks are noted on the plan and meet the requirements based on our meeting with DCD, planning, zoning, storm water and DPW in early September.
6. Slatted fencing will be used along all fence lines that face residential properties and 6th Street.
7. The only open spaces per the enclosed drawings are the drainage areas used for the storm water management.
8. The driveway for the property will move to the north end of the property to provide for safe ingress and egress and will meet the guidelines of the comprehensive plan as shown in the drawings. In addition we have been working with the city as it pertains to the improvement of 6th street.
9. The landscape plan is attached and will meet the Type E standards and will fit the concepts of AGBA and The Garden District.
10. The lighting will meet all requirements for the city and Airport to provide a safe secure environment as shown in the attached lighting plan.
11. All new utilities will be placed underground along with the existing above ground utilities on the property.
12. A 6’ x 11’ sign will be installed by the new entrance

If you have any further questions please do not hesitate to call or e-mail me.
Thank you for your time and consideration

Gregg Lindner
Lindner Logistics
Lindner Terminals

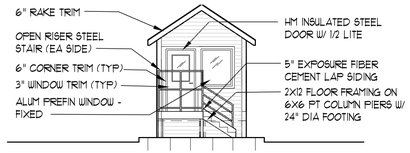

GUARD SHACK - WEST (2 / C1.1)
1/8" = 1'-0"

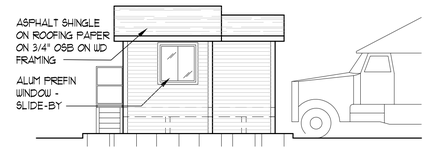

GUARD SHACK SIDE (SIM) - SOUTH (3 / C1.1)
1/8" = 1'-0"

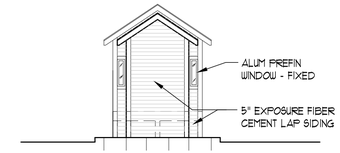

GUARD SHACK - EAST (4 / C1.1)
1/8" = 1'-0"

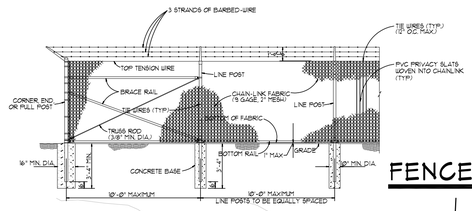

FENCE DETAIL

FUTURE RPZ

CURRENT RPZ

SITE CALCULATOR			
	SQUARE FEET	ACRES	PERCENTAGE
TOTAL SITE	636,085.00	14.60261627	100.00%
BUILDING AREA	249,518.00	5.728189798	39.23%
OTHER AREA	-	0	0.00%
PAVING AREA	337,302.85	7.743468383	53.03%
REMAINING GREEN SPACE	49,264.15	1.130958093	7.74%

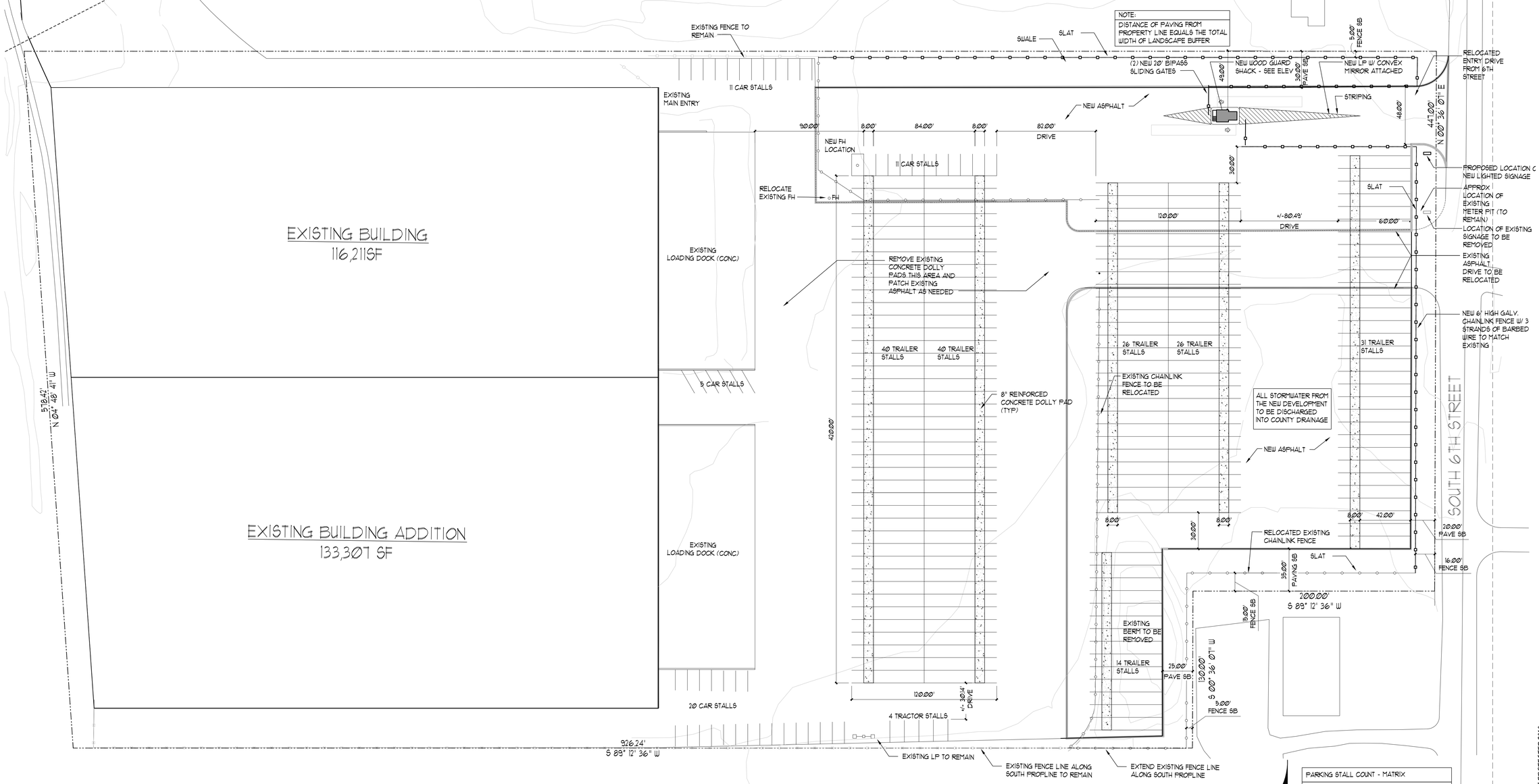

SITE PLAN - OPTION 4 (1 / C1.1)
1" = 40'

PARKING STALL COUNT - MATRIX		
TRAILER STALLS	177	(105' X 60' EACH)
CAR STALLS	47	(10' x 18')
TRACTOR STALLS	4	(12' x 18')

REVISIONS

SYMBOL LEGEND
- CONCRETE WALL
- CMU / MASONRY WALL
- STUD WALL
- STUD WALL W/ INSUL
- WALL TYPE TAG
- WINDOW / GLAZING TAG
- DEMO DOOR IN DEMO WALL
- EXISTING DOOR IN EXISTING WALL
- NEW DOOR W/ DOOR NUMBER TAG

ANDERSON-ASHTON, INC.
DESIGN PLANNING CONTRACTING
2746 South 166th Street
New Berlin, WI 53151
Phone: (262) 786-4640
Fax: (262) 786-4675
Wisconsin Registered Contractor: ID #: 1048911 WI Dept of Commerce

PROPOSED ADDITION / REMODEL FOR:
RGS WAREHOUSE
SOUTH 6TH STREET MILWAUKEE, WI 53221

DRAFTED BY: SLW
PROJECT DESIGNER: SLW
SUBMITTAL DATE: -
LATEST REV. DATE: Oct.-26-10
JOB NO. 0945
SHEET C1.1

COPYRIGHT PROTECTED 2010

Plant List

	BOTANICAL/COMMON NAME	SIZE	QTY
Deciduous trees:			
A	Acer freemanii "Jeffersred" Maple Autumn Blaze	2.5"BB	14
B	Acer Platanoides "Medallion" Medallion Maple	2.5"BB	11
C	Tilia cordata "Greenspire" Greenspire Linden	2.5"BB	7
D	Ulmus americana "Valley Forge" Crab Prairie Fire	2.5"BB	4
E	Zelkova serrata "Green Vase" Zelkova Green Vase	2.5"BB	1
Shrubs:			
F	Diervilla sessifolia Dw. Bush Honeysuckle	24"P	56
G	Cotoneaster acutifolia Peking Cotoneaster	24"P	40
H	Viburnum dentatum Arrowwood Viburnum	24"P	24
J	Spirea x Van Houttei "Renaissance" Renaissance Bridal Wreath	24"P	24
K	Cornus sericea "Baileys Red" Red Dogwood	24"P	24
L	Ligustrum vulgare "Cheyenne" Cheyenne Privet	24"P	40
M	Spirea bumalda "Anthony Waterer" Spirea A.W.	24"P	40
N	Rhus aromatica "Gro-lo" Gro lo Sumac	24"P	40

Shade Tree Planting
NO SCALE

Shrub Planting
NO SCALE

GENERAL NOTES

DIGGING
Contact local diggers hotline prior to doing any digging.

MULCHING
Trees and shrubs to receive a 3" layer of shredded hardwood mulch, with no more than 1" of mulch at the base of the tree or shrub.
Perennials are to receive 1" of mulch unless otherwise noted.

SUBSTITUTIONS
Substitution of plant material must be approved by owner and/or Landscape Architect.

PLANT MATERIAL
All plant material will be #1 stock in accordance with the American Nurseryman's Standards.

PLANTING
A. All trees are to be planted in holes 18" larger in diameter than the root ball of the tree. All shrubs are to be planted in holes 12" larger in diameter the the root ball of the shrub.
B. Holes are to be backfilled with a mixture of 2/3 original soil and 1/3 plant starter.
C. Trees and shrubs are to be planted with fertilizer packets.
D. Evergreen trees (6' or larger) are to be staked with 2 stakes and straps.
E. Trees and ornamentals may be staked. Contractor responsible for trees that move or shift in the hole.
F. Perennial and annual beds are to be amended with 2-3" of plant starter, roto-tilled in to a depth of 6".
G. All areas disturbed by landscape construction are to be seeded or sodded Seeding will require 5 lbs. of seed per 1000sf. Starter fertilizer should be used at the rate of 4lbs/1000sf.

NOTE: Plat of survey for this property is provided by others. Hawks Nursery takes no responsibility for the accuracy thereof and none should be assumed.

TERMS OF APPROVAL

1) No approved material or other landscape material shall be substituted without Board of Zoning Appeals approval.
2) Owner/Applicant shall be responsible for continuous landscape maintenance including plant material replacement on a seasonal basis if such material is no longer comparable in size to the plant list specifications, and inconsistent with the typical form/shape of that species because of dieback, stunting or damage.
3) Plant material size and quality shall comply with the recommendations and requirements of ANSI z60.1 "American Standard for Nursery Stock" (latest edition)
4) Plant material sizes specified are the accepted minimum and shall not be decreased subsequent or prior to installation.
5) Shrub material shall be at least 2-2.5 ft. in height at the time of installment (except for spreading varieties)
6) Where an approved plant material screen is substituted for a 3 to 3.5' high 80 percent opaque fence or wall, such material shall be planted at a size which will meet this opacity standard within two years and shall be maintained at that height and opacity level.
7) (Complete either a or b)
   a. All landscape improvements shall be completed within _____ days of occupancy provided weather Conditions will permit. A request for postponement must be submitted at least 10 days prior To this deadline with justifiable reason.
   b. All landscape improvements shall be completed within _____ days of the Department of Building Inspection's approval of this landscape plan. A request for postponement must be submitted At least 10 days prior to this deadline with justifiable reasons.

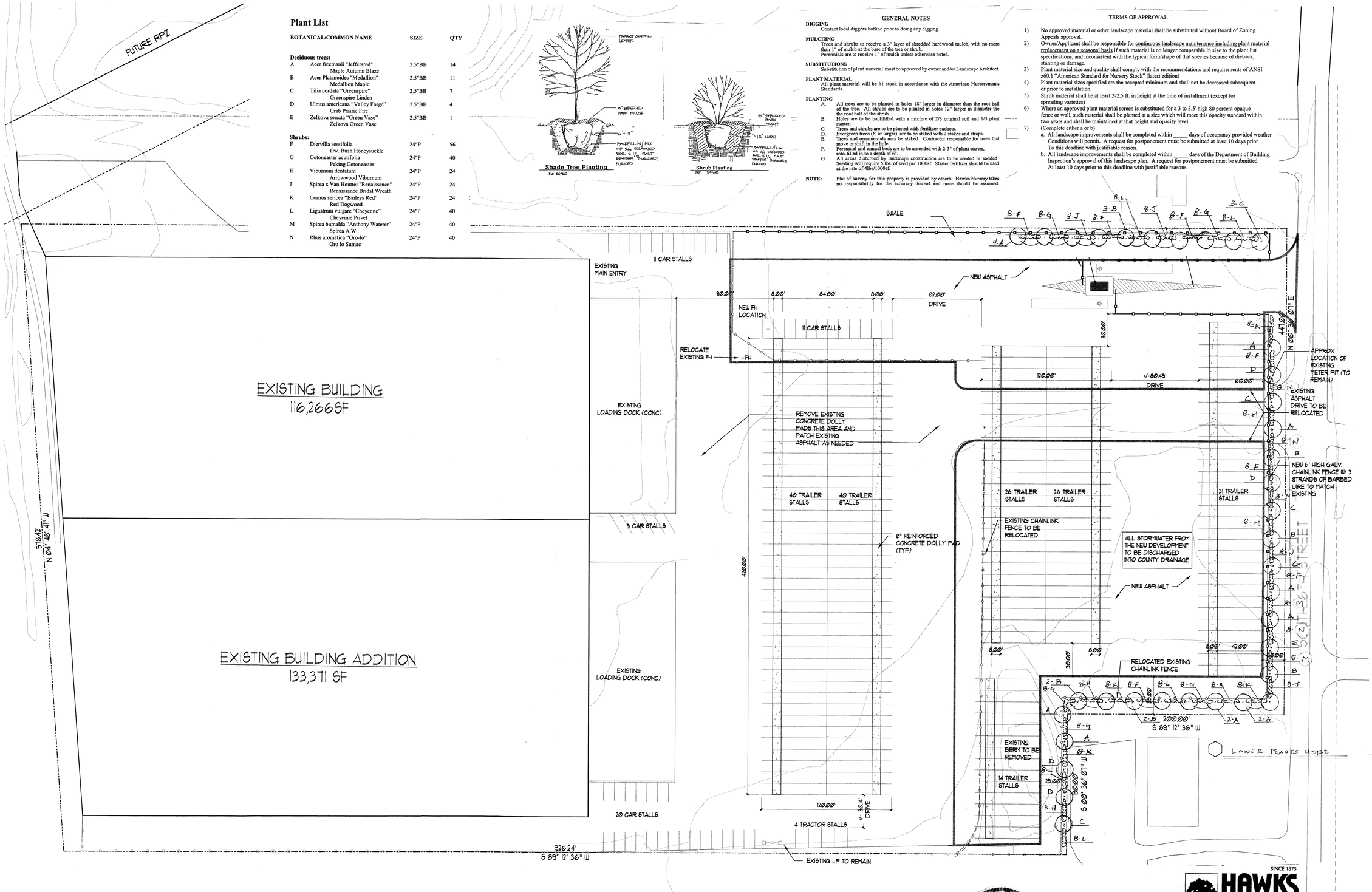

WISCONSIN JOHN S. HYLAND LA - 291 MILWAUKEE, WI LANDSCAPE ARCHITECT

SINCE 1875
HAWKS NURSERY
12217 West Watertown Plank Road
Wauwatosa, Wisconsin 53226
414/258-5525 • FAX 414/258-9739
Steve Hyland-Landscape Architect

LANDSCAPE PLAN
1" = 40'
1
C1.1

REVISIONS

SYMBOL LEGEND
CONCRETE WALL
CMU / MASONRY WALL
STUD WALL
STUD WALL W/ INSUL
WALL TYPE TAG
WINDOW / GLAZING TAG
DEMO DOOR IN DEMO WALL
EXISTING DOOR IN EXISTING WALL
NEW DOOR W/ DOOR NUMBER TAG

ANDERSON-ASHTON, INC.

DESIGN-PLANNING-CONTRACTING
2746 South 166th Street
New Berlin, WI 53151
Phone: (262) 786-4640
Fax: (262) 786-4675
Wisconsin Registered Contractor:
ID #: 1048911 WI Dept of Commerce

PROPOSED ADDITION / REMODEL FOR:
RGS WAREHOUSE
SOUTH 6TH STREET MILWAUKEE, WI 53221

DRAFTED BY:	SLW
PROJECT DESIGNER:	SLW
SUBMITTAL DATE:	-
LATEST REV. DATE:	Sep.-15-10
JOB NO.	0445
SHEET	C1.2

COPYRIGHT PROTECTED 2010

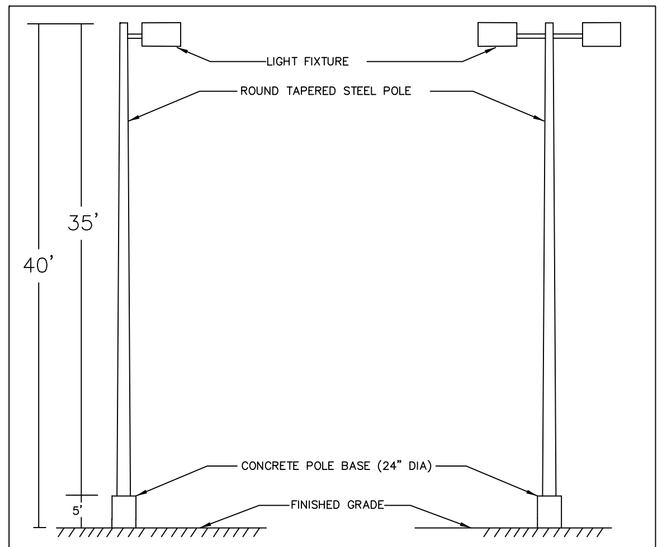

SITE LIGHTING POLE DETAIL
NTS

**THIS POLE FOOTING DETAIL IS TYPICAL, FOR INFORMATIONAL PURPOSES ONLY; ACTUAL FOOTING SHOULD BE DESIGNED FOR THE SPECIFIC APPLICATION AND LOCATION WITH CONSIDERATION TO ACTUAL REQUIRED SEISMIC, SOIL, WIND LOAD CONDITIONS, ETC.

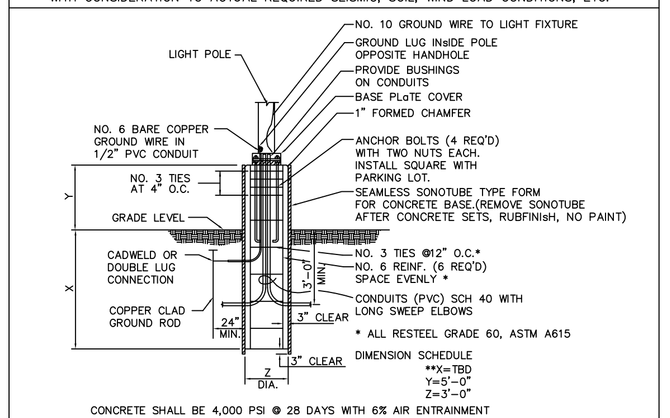

* ALL RESTEEL GRADE 60, ASTM A615

DIMENSION SCHEDULE
**X=TBD
Y=5'-0"
Z=3'-0"

CONCRETE SHALL BE 4,000 PSI @ 28 DAYS WITH 6% AIR ENTRAINMENT

TYPICAL LIGHT POLE BASE DETAIL
NTS

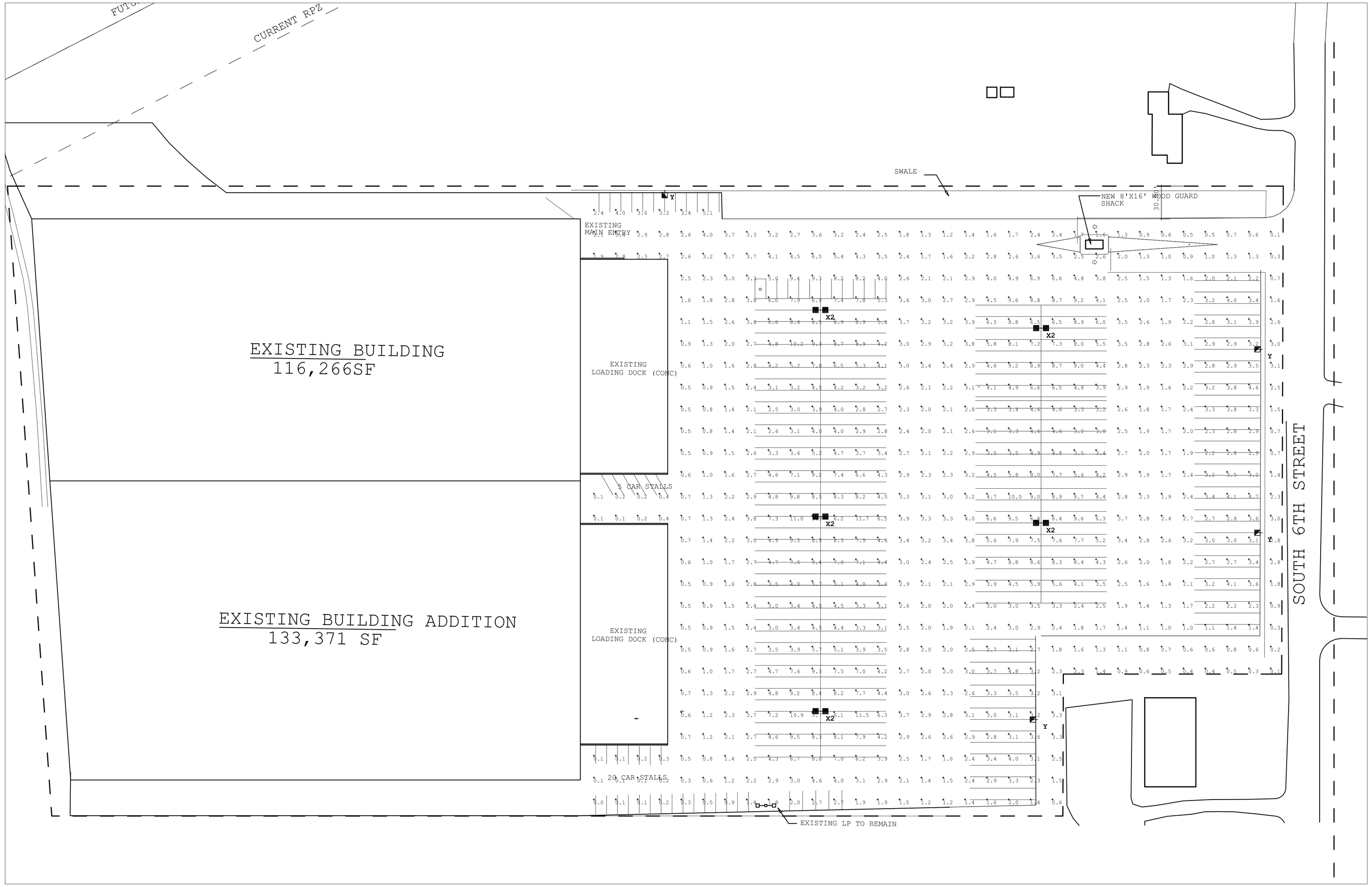

1 SITE LIGHTING PHOTOMETRIC PLAN
SCALE: 1" = 50'

Calculation Summary						
Label	CalcType	Units	Avg	Max	Min	Avg/Min
CalcPts	Illuminance	Fc	3.37	11.7	0.0	N.A.

Luminaire Schedule						
Symbol	Qty	Label	Arrangement	Lumens	LLF	Description
	5	X2	BACK-BACK	120000	0.800	Visionaire AME-4-T5-1000PS-VLFG-SEG
	4	Y	SINGLE	120000	0.800	Visionaire AME-4-T3-1000 PULSE START-VLFG

General Notes

A. Perimeter, type III, fixture optics are to be directed into the site.
B. Light shields (External House Side Shields) are to be placed on fixtures to minimize light spillage past the property line.
C. Rotated Optics are to be rotated in the field. Optics are to be directed into the site.

For Additional Lighting Information and Pricing Contact:
On-Site Lighting & Survey, LLC
PH: 763-684-1548

Project No. 1009221

Based on the information provided, all dimensions and luminaire locations shown represent recommended positions. The engineer and/or architect must determine applicability of the of the layout to existing or future field conditions.

This lighting pattern represents illumination levels calculated from laboratory data taken under controlled conditions utilizing current industry standard lamp ratings in accordance with Illuminating Engineering Society approved methods. Acutal performance of any manufacturer's luminaire may vary due to variation in electrical voltage, tolerance in lampS And other variable field conditionS.

On-Site Lighting & Survey, LLC
1111 Hwy 25 North, Suite # 201
Buffalo, MN. 55313
Ph 763-684-1548 Fax 763-682-9048

Revision: Date:

Title: PHOTOMETRIC PLAN

Project: RGS WAREHOUSE MILWUKEE, WI

Project #: 1009221

Contract #:

Issue Date: 09/23/2010

Scale: AS NOTED

Drawn/Checked: WRT/TFB

Sheet #: SL1

Rev. # 0

THE UNDERGROUND UTILITY INFORMATION AS SHOWN HEREON IS BASED, IN PART, UPON INFORMATION FURNISHED BY UTILITY COMPANIES AND THE LOCAL MUNICIPALITY. WHILE THIS INFORMATION IS BELIEVED TO BE RELIABLE, ITS ACCURACY AND COMPLETENESS CANNOT BE GUARANTEED NOR CERTIFIED TO.

(P) INDICATES PIPE SIZES PER RECORD PLANS. OTHER PIPE SIZES ARE ESTIMATED. NO PIPE SIZES SHOULD BE RELIED UPON WITHOUT FURTHER VERIFICATION.

PLAT OF SURVEY

WITH TOPOGRAPHIC DATA

SITUATED ON SOUTH 6th STREET IN THE CITY OF MILWAUKEE, MILWAUKEE COUNTY, WISCONSIN.

PART OF THE NORTHEAST 1/4 AND THE SOUTHEAST 1/4 OF THE SOUTHWEST 1/4 OF SECTION 32, TOWN 6 NORTH, RANGE 22 EAST, IN THE CITY OF MILWAUKEE, MILWAUKEE COUNTY, WISCONSIN, BOUNDED AND DESCRIBED AS FOLLOWS:
COMMENCING AT THE NORTHEAST CORNER OF SAID 1/4 SECTION; THENCE SOUTH 00°36'07" EAST ALONG THE EAST LINE OF SAID 1/4 SECTION 900.09 FEET TO A POINT; THENCE SOUTH 89°12'36" WEST 33.00 FEET TO A POINT ON THE WEST LINE OF SOUTH 6TH STREET AND THE POINT OF BEGINNING OF THE LANDS TO BE DESCRIBED; THENCE SOUTH 00°36'07" EAST ALONG SAID WEST LINE 447.00 FEET TO A POINT; THENCE SOUTH 89°12'36" WEST 200.00 FEET TO A POINT; THENCE SOUTH 00°36'07" EAST 130.00 FEET TO A POINT; THENCE SOUTH 89°12'36" WEST 926.24 FEET TO A POINT ON THE EASTERLY LINE OF A C&P RAILROAD RIGHT-OF-WAY; THENCE NORTH 04°48'41" WEST ALONG SAID EAST LINE 578.42 FEET TO A POINT; THENCE NORTH 89°12'36" EAST 1168.70 FEET TO THE POINT OF BEGINNING.
SAID PARCEL CONTAINS 636,085 SQUARE FEET OR 14.6025 ACRES.

September 13, 2010 LINDNER LOGISTICS SURVEY NO. 158480 – ERS

NOTE:

6TH STREET WAS UNDER CONSTRUCTION WHEN THE TOPOGRAPHIC DATA WAS COLLECTED ON SEPTEMBER 13, 2010.

I Certify *that I have surveyed the above described property (Property), and the above map is correct to the best of my professional knowledge and belief and shows the size and location of the Property, its exterior boundaries, the location and dimensions of all visible structures thereon, boundary fences, apparent easements and roadways and visible encroachments, if any. This survey is made for the exclusive use of the present owners of the Property, and also those who purchase, mortgage, or guarantee the title thereto, within one (1) year from date hereof.*

ERIC R. STURM
REGISTERED WISCONSIN LAND SURVEYOR S–2309

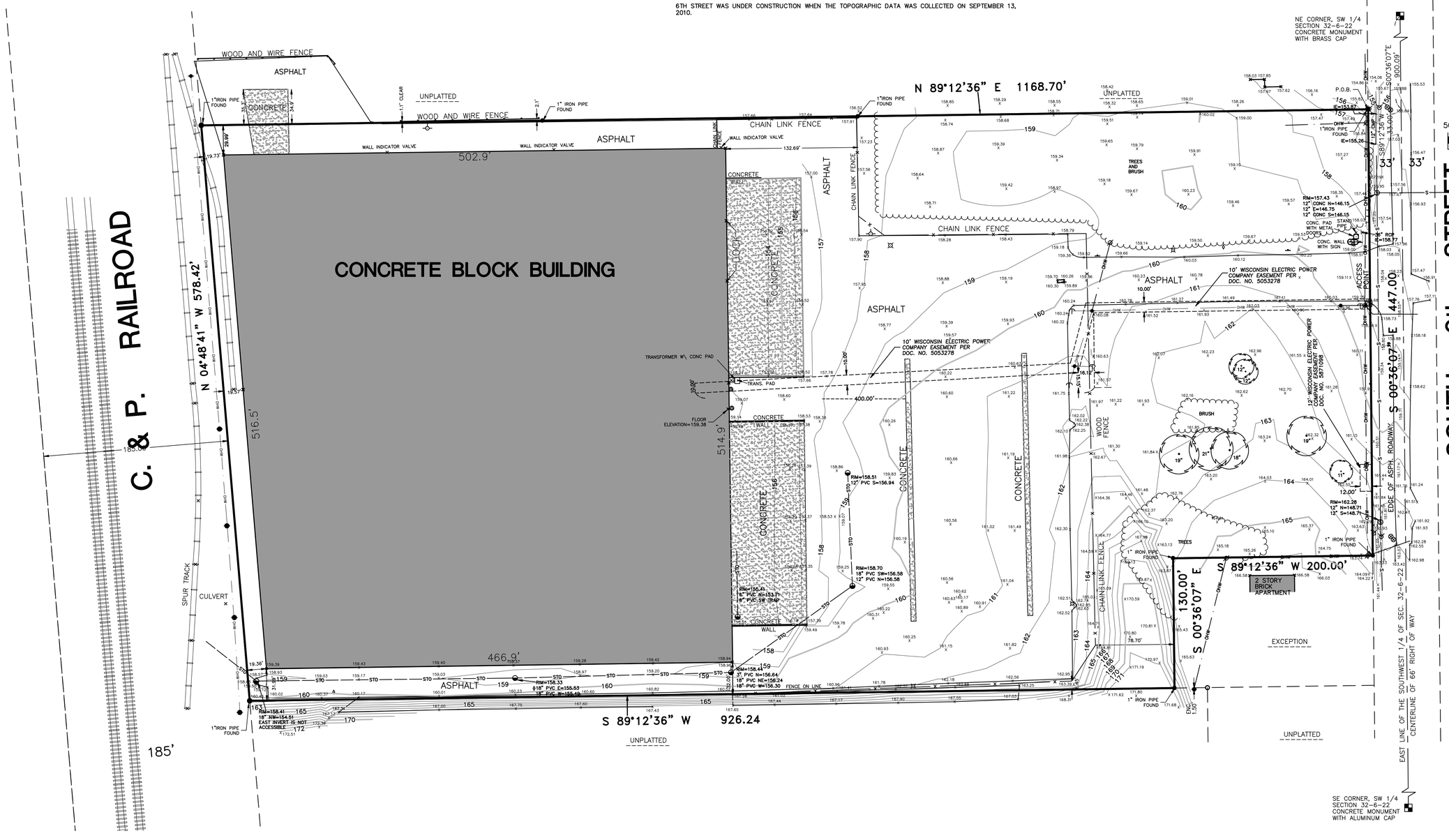

LEGEND

- △ BENCHMARK
- SECTION CORNER
- ● IRON PIPE FOUND
- ○ IRON PIPE SET
- BOLLARD
- SOIL BORING/MONITORING WELL
- FLAGPOLE
- MAILBOX
- SIGN
- BILLBOARD
- CONTROL BOX
- TRAFFIC SIGNAL
- RAILROAD CROSSING SIGNAL
- CABLE PEDESTAL
- POWER POLE
- GUY POLE
- GUY WIRE
- LIGHT POLE
- GROUND OR OTHER SPOT SHOT
- HANDICAPPED PARKING
- ELECTRIC MANHOLE
- ELECTRIC PEDESTAL
- ELECTRIC METER
- TELEPHONE MANHOLE
- TELEPHONE PEDESTAL
- MARKED FIBER OPTIC
- GAS VALVE
- GAS METER
- STORM MANHOLE
- ROUND INLET
- SQUARE INLET
- STORM SEWER END SECTION
- SANITARY MANHOLE
- SANITARY CLEANOUT OR SEPTIC VENT
- SANITARY INTERCEPTOR MANHOLE
- MISCELLANEOUS MANHOLE
- WATER VALVE
- HYDRANT
- WATER SERVICE CURB STOP
- WATER MANHOLE
- WELL
- WATER SURFACE
- WETLANDS FLAG
- MARSH
- CONIFEROUS TREE
- DECIDUOUS TREE
- SHRUB

- –EDGE OF TREES
- –SANITARY SEWER
- –STORM SEWER
- –WATERMAIN
- –MARKED GAS MAIN
- –MARKED ELECTRIC
- –OVERHEAD WIRES
- –BUREAU ELEC. SERV.
- –MARKED TELEPHONE
- –MARKED CABLE TV LINE
- –MARKED FIBER OPTIC

R.A. Smith National, Inc.

Beyond Surveying and Engineering

16745 W. Bluemound Road, Brookfield WI 53005-5938
262-781-1650 Fax 262-797-7373, www.rasmithnational.com

S:\5158480dwg\ 158480h0.dwg \PS301D50

SHEET 1 OF 1

S:\5158480\dwg\158480h0.dwg, PS301D50, 9/14/2010 2:22:42 PM, crw

GENERAL CONSTRUCTION SPECIFICATIONS:

1. All work shall be in accordance with the Standard Specifications for Highway and Structure Construction, State of Wisconsin, Latest Edition, and the City of Milwaukee Ordinances and/or the Standard Specifications as set forth in the State of Wisconsin Department of Commerse. All permits must be obtain by the contractor prior to commencing work.
2. All erosion control measures specified on this plan shall meet the design criteria, standards and specifications as set forth in the Department of Natural Resources Wisconsin Technical Standards.
3. All erosion control devices (i.e., silt fence, gravel entrance, etc.) shall be installed prior to commencing mass grading or utility construction.
4. All activities on the site shall be conducted in a logical sequence to minimize the area of bare soil exposed at any one time.
5. The OWNER shall provide all surveying and construction staking for this contract. All contractors shall exercise care and diligence in protecting the same. Any expense incurred for additional restaking caused by contractor's neglect may be charged to the contractor and deducted from the sums due him under this contract.
6. The contractor shall notify Diggers Hotline, the local municipality and all government agencies that may be affected by the contractor's operations at least three (3) days before breaking ground. Diggers Hotline number is 811.
7. Public roads shall not be closed to traffic at any time. All ingress and egress traffic to the project shall be limited to the gravel entrance to the property.
8. Contractor shall be responsible for maintaining the Streets shall be kept free of silt or dirt tracked from areas under construction by sweeping at the end of each work day or more often, as required. Dust generated by construction activities shall be minimized by use of watering, calcium chloride surface treatment, construction scheduling or other appropriate methods.
9. Upon completion of the work as specified, respread four (4") inches of salvaged topsoil over all disturbed areas and provide seed, fertilizer and apply fabric per the Standard Specifications.
10. All disturbed areas shall be revegatated within seven days of no disturbance. Highway mix #40 shall be used for seeding with an application rate of 4.0 lbs/1000 sf.
11. All erosion control devices shall be routinely inspected every seven days or within 24 hours of a rainfall greater than 0.5 inches. (By GERERAL CONTRACTOR).
12. If permanent seeding is not completed by September 15, apply temporary seeding (SEE SEED MIX SHOWN ON PLAN). If temporary seeding is not completed by October 15, a WisDOT Type B soil stabilizer shall be applied to inactive disturbed soils between October 15th and May 1st as a temporary soil stabilization measure during the non-growing season. Permanent seeding must be completed by September 15, 2010.

SITE/GRADING WORK BY GRADING CONTR.

1. VISIT JOB SITE TO VERIFY EXISTING SITE CONDITIONS PRIOR TO STARTING CONSTRUCTION. MEET WITH GENERAL CONTRACTOR PRIOR TO STARTING.

2. REMOVE EXISTING TREES ALONG WITH ROOTS AS REQUIRED @ PROPOSED PAVING AREAS.

3. STRIP AND REMOVE ALL REMAINDER VEGETATION & TOP SOIL FROM WITHIN THE PAVING AREAS. ALL EXCESS MATERIAL TO REMAIN ON SITE, LOCATION AS DIRECTED BY THE CONSTR. MANAGER. RESPREAD OVER DISTURBED AREAS TO APPROX. 4" DEPTH AFTER CONSTRUCTION IS FINISHED.

4. PROOF ROLL PARKING LOT AREA FOR ANY SOFT MATERIALS. REPORT ANY SOFT SPOTS TO THE GENERAL CONTRACTOR.

5. ALL FILL MATERIAL FOR BRINGING GRADES UP TO SUB-GRADE ELEVATIONS SHALL BE GRANULAR OR CLEAN COMPACTABLE CLAY.

6. ALL BACKFILL & FILL MATERIALS SHALL BE INSPECTED AND APPROVED BY ANDERSON-ASHTON PRIOR TO PLACEMENT. ALL FILL MATERIALS SHALL BE COMPACTED IN 8" MAX. LIFTS @ 95% MODIFIED PROCTOR.

7. PREPARE THE PAVING AREA AS SHOWN ON THE CONSTRUCTION DOCUMENTS to +/- 0.10'

8. GRADING CONTRACTOR SHALL FIX AND REPAIR PARKING AREA AND DRIVES AS REQUIRED AFTER UTILITY AND OTHER WORK THAT MAY DISTURB THE SOIL AND/OR GRAVEL BASE BEFORE PAVING BEGINS. GRADING CONTRACTOR SHALL SMOOTH DRUM ROLL ALL PARKING AREAS AND DRIVES BEFORE PAVING BEGINS.

9. GRADING CONTRACTOR SHALL BE PREPARRED TO HANDLE ALL SPOILS WHICH MAY INCLUDE ON SITE STORAGE AND TRUCKING OFF SITE

10. AWARDED GRADING CONTRACTOR SHALL BE RESPONSIBLE FOR THE LABOR AND MATERIAL NEEDED FOR SUPPLYING ANY TRAFFIC CONTROL BARRIERS OR SIGNS AS NEEDED PER LOCAL OR D.O.T. CODES & REGULATIONS DUE TO ANY ROAD WORK OUTSIDE OF PROPERTY LINES

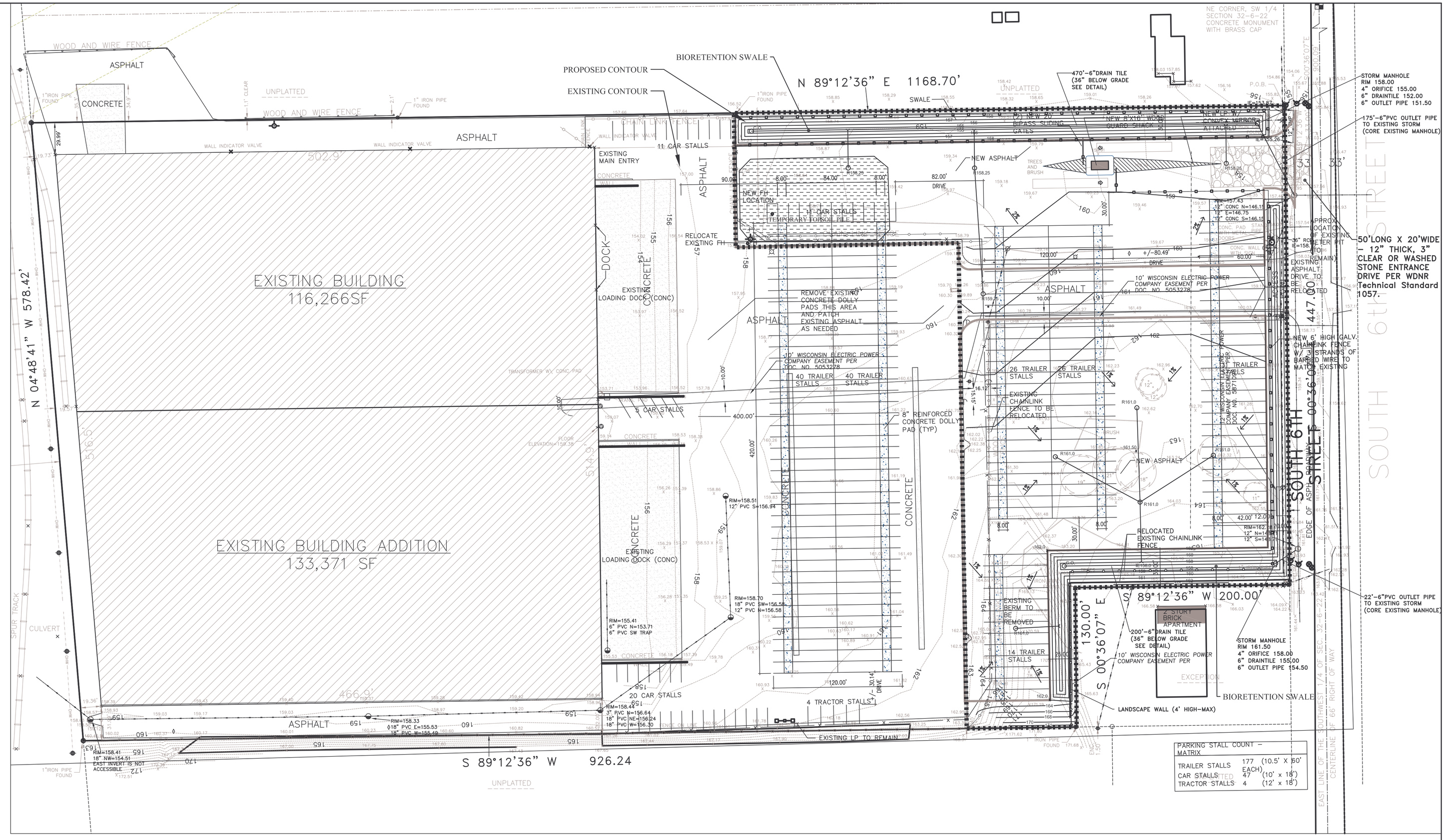

CONSTRUCTION PHASING SEQUENCING:

THE GRADING AND UTILITY CONTRACTORS MUST FOLLOW THE FOLLOWING CONSTRUCTION SEQUENCE AS REQUIRED BY THE WDNR AND THE CITY OF MILWAUKEE.

1. INSTALL GRAVEL CONSTRUCTION ENTRANCE AS SHOWN ON THE PLAN (TRACKING PAD).
2. INSTALL SILT FENCE AROUND PARIMETER OF NEW PARKING LOT.
3. STRIP TOPSOIL FROM THE PROPOSED STORM WATER FACILITY AREA ONLY AND HAUL EXCESS OFFSITE. CONSTRUCT BIORETETION SWALE AND OUTLET PIPING WITH 4" RESTRICTOR. KEEP AMOUNT OF TOPSOIL ONSITE FOR RESPREAD IN BIO AREA.
4. STRIP TOPSOIL FROM THE PROPOSED PARKING LOT AND HAUL OFFSITE.
5. CONSTRUCT STORM SEWERS & COMPLETE PARKING LOT.
6. REVEGETATE AND STABILIZE ALL DISTURBED AREAS PER PLAN.
7. DREDGE OUT SEDIMENTS COLLECTED DURING CONSTRUCTION TO MEET PROPOSED GRADING PLAN AND DISPOSE OF OFF SITE.

ASPHALT PAVING WORK

1. FURNISH AND INSTALL A 8" CRUSHED AGGREGATE BASE AT THE ASPHALT PAVING TRUCK & AUTO / DRIVE AREAS.
2. FINE GRADE AND COMPACT STONE BASE.
3. FURNISH AND INSTALL A 4" (TWO LIFT) AVG. THICKNESS COMPACTED ASPHALT PAVEMENT AT TRUCK/DRIVE AREAS
4. FURNISH AND INSTALL A 3" (TWO LIFT) AVG. THICKNESS COMPACTED ASPHALT PAVEMENT AT AUTO PARKING AREA
5. FURNISH AND INSTALL ALL PARKING STALL STRIPING, H.C. SYMBOLS, & H.C. SIGNS ON METAL POSTS.

THE INFORMATION AS SHOWN HEREON IS BASED, IN PART, UPON INFORMATION FURNISHED BY THE PROJECT SURVEYOR, UTILITY COMPANIES AND THE LOCAL MUNICIPALITY. WHILE THIS INFORMATION IS BELIEVED TO BE RELIABLE, ITS ACCURACY AND COMPLETENESS CANNOT BE GUARANTEED NOR CERTIFIED TO.

NOTE:
BOUNDARY & TOPOGRAPHIC SURVEY PROVIDED BY RA SMITH NATONAL, INC. DATED SEPT 13, 2010.

SILT FENCE CONSTRUCTION

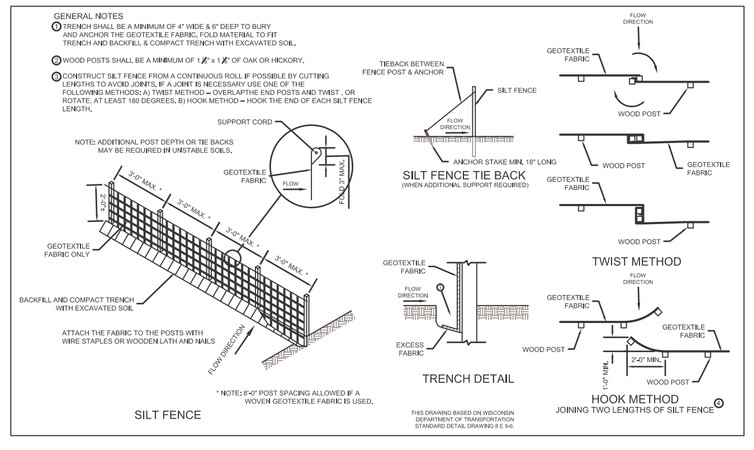

NOTE:
SILT FENCE AND TRACKING PAD SHALL CONFORM TO TECHNICAL STANDARDS 1056 & 1057 RESPECTIVELY.

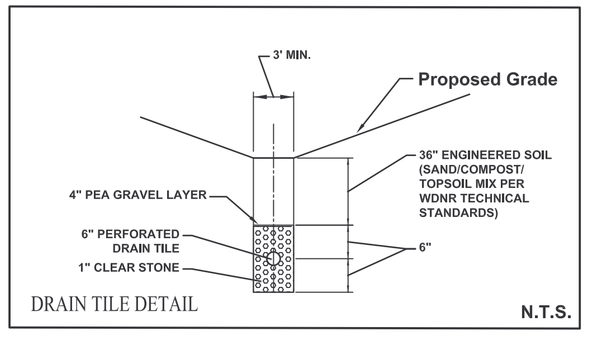

REVISIONS	
DATE	BY

ELLENA ENGINEERING CONSULTANTS, LLC
SITE CIVIL ENGINEERING & STORMWATER MANAGEMENT
Ellena Engineering Consultants, LLC • 700 Pilgrim Parkway • Suite 100 • Elm Grove, WI 53122
Phone: 262-719-6183 • Fax: 866-457-2584 • Email: mellena@eeceng.com

RGS PARKING LOT ADDITION
Milwaukee, Wisconsin

WISCONSIN MARK R. ELLENA E-24090 WALES, WI PROFESSIONAL ENGINEER

Master Grading & Drainage Plan

SCALE: 1"=50'	JOB NO.:	DATE: 09/15/10
DESIGNED BY: MRE,PE		CHECKED BY:
APPROVED BY: CITY ENGINEER DATE		SHEET C1.0

Lindner Log

Lindner Logistics

Lindner Logistics
GREAT L
RETAIL SUPPOR
QUALI
ROUNDY'S
QUALITY FOODS SINCE 1872
QUALITY
3

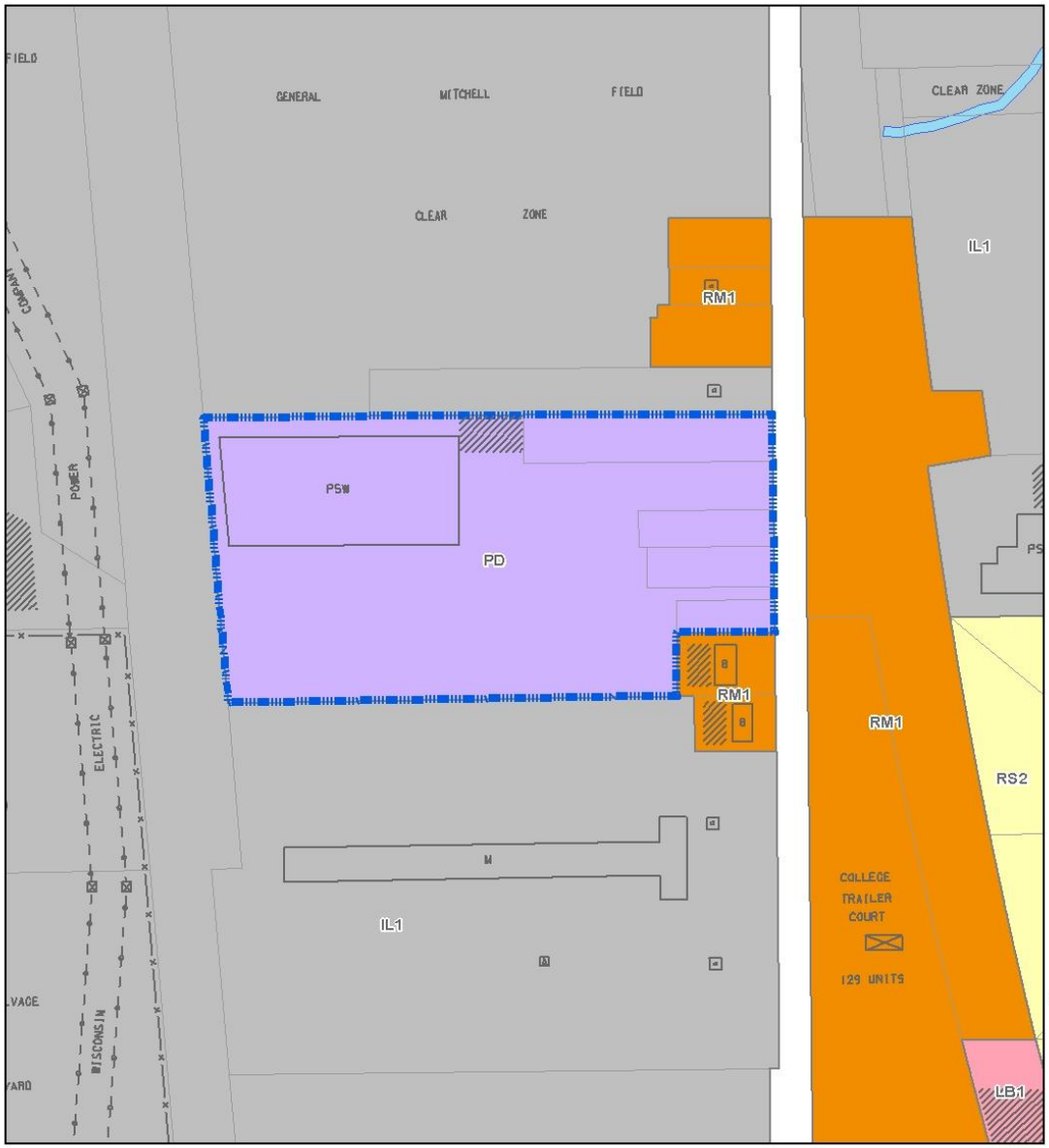

FN 100766
2nd Amendment to DPD
November 2010

Proposed Zoning Change

Residential Districts
- Single Family (RS1-6)
- Two-Family (RT1-4)
- Multi-Family (RM1-7)
- Residential and Office (RO1-2)

Commercial Districts
- Neighborhood Shopping (NS1-2)
- Local Business (LB1-2)
- Commercial Service (CS)
- Regional Business (RB1-2)
- Central Business (C9A-C9H)

Industrial Districts
- Industrial - Office (IO)
- Industrial - Light (IL1-2)
- Industrial - Mixed (IM)
- Industrial - Heavy (IH)

Special Districts
- Parks (PK)
- Institutional (TL)
- Planned Development (PD, DPD)
- Redevelopment (RED)

N

0 210 420 840 Feet

Data source: Department of City Development 2010

November 8, 2010

To the Honorable Members of the
Zoning, Neighborhoods and Development Committee
City of Milwaukee
City Hall, Room 205

Dear Committee Members:

File No. 100766 relates to the Second Amendment to a Detailed Planned Development known as RGS Warehouse, to allow for site plan modifications, on lands located on the west side of South 6th Street and north of West College Avenue, in the 13th Aldermanic District.

This zoning amendment was requested by Gregg and Scott Lindner to permit an increase in trailer and automobile parking, as well as add a guard house at the parking lot entrance, and make modifications to the fencing, stormwater management, and landscaping on the site. Specifically, the proposal would increase the parking lot to add spaces for approximately 170 semi trailers and 40 automobiles, to accommodate the growth and expansion of an existing tenant. In order to secure the parking lot, fencing will be added along the perimeter of the site to match the existing fence. Opaque slats will be added to the fence, which will be 6 feet high with three strands of wire along the top, to further screen the parking from the abutting properties. Additionally, a new guard shack will be added at the entrance, which will be gate controlled. The security of the parking is critical in retaining General Mills as a tenant. The existing driveway will be shifted to the north of the site to improve traffic flow throughout the lot.

The project is consistent with the Southeast Side Comprehensive Area Plan recommendations in that it is clustered in an industrial uses area near the airport. It is also screened with appropriate landscaping.

On November 8, 2010, a public hearing was held and at that time several people, including Tom Rave of the Airport Gateway Business Association and Gateway to Milwaukee, and the Alderman's office, spoke in favor of the proposal. One neighbor to the north was opposed to the project, and requested that a berm be placed along the shared property line to alleviate noise concerns; however, a berm is not possible at this location because the bioswales for stormwater management must run along the property line. Since the proposed change is consistent with the previously approved DPD and the recommendations of the Southeast Side Comprehensive Area Plan, the City Plan Commission at its regular meeting on November 8, 2010 recommended approval of the subject file.

Sincerely,

Rocky Marcoux
Executive Secretary
City Plan Commission of Milwaukee

cc: Ald. Terry Witkowski

Address of parcel(s): 6055 S 6th St

Affidavit for Zoning Change

1. POLICY (s. 295-313). Each applicant for a zoning map amendment or approval of a planned development, and each applicant for a use variance or special use permit, shall submit to the city plan commission or the board of zoning appeals, as the case may be, a signed affidavit indicating whether the applicant is: (NOTE: DISCLOSE ALL RELEVANT AND REQUIRED INFORMATION ON A SEPARATE SHEET AND ATTACH TO THIS SHEET UPON SUBMITTAL)

   a. Delinquent in the payment of any property tax, special assessment, special charge or special tax due to the city, provided that all appeals of the tax, assessment or charge have been concluded or the time to appeal has expired. YES ☐ NO ☒

   b. A party against whom the city has an outstanding judgment, provided that all appeals of the judgment have been concluded or the time to appeal has expired. YES ☐ NO ☒

   c. A party against whom the city has outstanding health or building and zoning code violations or orders from the commissioner of health or commissioner of neighborhood services that are not actively being abated, provided that all appeals of orders to correct violations have been concluded or the time to appeal has expired. YES ☐ NO ☒

   d. A party who has been convicted of violating an order of the commissioner of health or commissioner of neighborhood services within the past year, provided that all appeals of the conviction have been concluded or the time to appeal has expired. YES ☐ NO ☒

   e. The owner of premises found to be in violation of s. 80-10 to whom the commissioner of neighborhood services has charged the costs of police enforcement pursuant to s. 80-10-4, provided that all appeals of these charges have been concluded or the time to appeal has expired. YES ☐ NO ☒

2. NON-INDIVIDUAL APPLICANTS

   a. Corporations. If the applicant is a corporation, a duly authorized officer or director of the corporation shall submit the affidavit required by sub. 1. The affidavit shall attest to whether each officer and director of the corporation as well as each shareholder owning 5% or more of voting stock, fits any of the descriptions in sub. 1-a to e.

   b. Partnerships. If the applicant is a partnership or limited partnership, a duly authorized partner, general partner or limited partner shall submit the affidavit required by sub 1. The affidavit shall attest to whether each partner, general partner and limited partner fits any of the descriptions in sub. 1-a to e.

   c. Limited Liability Companies. If the applicant is a limited liability company, a duly authorized member or manager of the company shall submit the affidavit required by sub. 1. The affidavit shall attest to whether each member and manager of the company fits any of the descriptions in sub. 1-a to e.

   d. Nonstock Corporations. If the applicant is a nonstock corporation, a duly authorized officer or director of the corporation shall submit the affidavit required by sub. 1. The affidavit shall attest to whether each officer and director of the corporation fits any of the descriptions in sub. 1-a to e.

Dated at Milwaukee, Wisconsin, this 15 day of SEPT, 2010.

Petitioner (signature)

GREGG R. LINDNER, MANAGING PARTNER
(print name, relationship to project) Lindner Terminals

Subscribed and sworn to before me
This 15th day of SEPT., 2010

Notary Public, State of Wisconsin
My commission expires: 9/29/13

NOTARY PUBLIC JAMES R. HENNE STATE OF WISCONSIN

Office Use Only: File no. 100766

NOTICES SENT TO FOR FILE 100766:

NAME	ADDRESS	DATE NOTICE SENT		
Rocky Marcoux	DCD	11/9/10		
Ald. Witkowski				
See attached list				

A&K PROPERTIES
2407 S POINT RD
GREEN BAY WI 53221

ANDERSON-ASHTON INC
PO BOX 370918
MILWAUKEE WI 53237

BROWN ESTATES PROPERTY LLC
6102 S 13TH ST
MILWAUKEE WI 53237

BRUCE H KROGSTAD
PO BOX 370675
MILWAUKEE WI 60076

ESTES EXPRESS LINES
C/O REAL EST
3901 W BROAD ST
RICHMOND VA 532270675

FOSTER G FINCO
6001 S 6TH ST
MILWAUKEE WI 53237

FROMM/TUCKER COLLEGIATE
9251 N KOSTNER
SKOKIE IL 54313

HALLADA, EDWARD J & PATRICIA
W129 S 6903 MACLEN DR
MUSKEGO WI 53237

JAMES N BARBIAN
1436 E FOREST HILL
OAK CREEK WI 23230

LINDNER TERMINALS LLP
PO BOX 370918
MILWAUKEE WI 53237

MILWAUKEE COUNTY AIRPORT
5300 S HOWELL AVE
MILWAUKEE WI 53154

SOO LINE RAILROAD
C/O REAL ESTATE
1501 MARQUETTE AV
MINNEAPOLIS MN 55402

ANDERSON ASHTON
BILL MATHEWS
2746 S 166TH ST
NEW BERLIN WI 53151

TOM RAVE
AIRPORT GATEWAY BUSINESS ASSOC
861 W LAYTON AV
MILWAUKEE WI 53221

CC Office - FN100766

Étiquettes faciles à peler
Utilisez le gabarit AVERY® 5960™
Sens de chargement
Consultez la feuille d'instruction
www.avery.com
1-800-GO-AVERY
Easy Peel Labels
Use Avery® TEMPLATE 5960™
Feed Paper
See Instruction Sheet for Easy Peel Feature
AVERY® 5960™

City of Milwaukee

200 E. Wells Street
Milwaukee, Wisconsin 53202

Legislation Details (With Text)

File #:	090919 **Version:** 1		
Type:	Ordinance	**Status:**	In Committee
File created:	11/3/2009	**In control:**	ZONING, NEIGHBORHOODS & DEVELOPMENT COMMITTEE
On agenda:		**Final action:**	
Effective date:			
Title:	A substitute ordinance to establish a Development Incentive Zone on land located generally along the east side of South 27th Street between West Howard Avenue and West Loomis Road, in the 13th Aldermanic District.		
Sponsors:	ALD. WITKOWSKI		
Indexes:	DEVELOPMENT INCENTIVE ZONE		
Attachments:	Exhibit A.pdf, Exhibit B.pdf, Development Incentive Zone Map.pdf, City Plan Commission Letter.pdf, Hearing Notice List		

Date	Ver.	Action By	Action	Result	Tally
11/3/2009	0	COMMON COUNCIL	ASSIGNED TO		
11/5/2009	0	ZONING, NEIGHBORHOODS & DEVELOPMENT COMMITTEE	REFERRED TO		
10/22/2010	1	CITY CLERK	DRAFT SUBMITTED		
11/1/2010	1	CITY CLERK	PUBLISHED		
11/9/2010	1	ZONING, NEIGHBORHOODS & DEVELOPMENT COMMITTEE	HEARING NOTICES SENT		
11/9/2010	1	ZONING, NEIGHBORHOODS & DEVELOPMENT COMMITTEE	HEARING NOTICES SENT		

powered by Legistar™

Number
090919
Version
SUBSTITUTE 1
Reference

Sponsor
ALD. WITKOWSKI
Title
A substitute ordinance to establish a Development Incentive Zone on land located generally along the east side of South 27th Street between West Howard Avenue and West Loomis Road, in the 13th Aldermanic District.
Analysis
This substitute ordinance establishes a Development Incentive Zone and approves Exhibit A relating to permitted and prohibited uses and Exhibit B relating to performance standards.
Body
The Mayor and Common Council of the City of Milwaukee ("Common Council"), do ordain as follows:

Part 1. There is added to the Milwaukee Code of Ordinances ("Code") a new section to read as follows:

Section 295-1007(2)(b).0018. The zoning map is amended to establish a Development Incentive Zone (DIZ) for the properties located at:

3804 South 27th Street, Tax Key No. 552-9936-110; 3774 South 27th Street, Tax Key No. 552-9938-000; 3636 South 27th Street, Tax Key No. 552-9939-111; 3702 South 27th Street, Tax Key No. 552-9939-221; 3700 South 27th Street, Tax Key No. 552-9939-222; 3860 South 27th Street, Tax Key No. 552-1591-000; 3800 South 27th Street, Tax Key No. 552-9937-000; and 2600 West Howard Avenue, Tax Key No. 552-1592-000.

Part 2. In accordance with the provisions of Section 295-1007(2)(a) of the Code relating to the establishment of Development Incentive Zones, the Common Council approves the list of permitted and prohibited uses, a copy of which is attached to this Common Council File as Exhibit A which is on file in the office of the City Clerk and made a part thereof as though fully set forth herein.

Part 3. In accordance with the provisions of Section 295-1007(2)(a) of the Code relating to the establishment of Development Incentive Zones, the Common Council approves the performance standards, a copy of which is attached to this Common Council File as Exhibit B which is on file in the office of the City Clerk and made a part thereof as though fully set forth herein.
Drafter
DCD:VLK:kdc
10/21/10

South 27th Street Development Incentive Zone (DIZ)
Exhibit A - Permitted and Prohibited Uses

	LB1	Development Incentive Zone (DIZ)
Residential Uses		
Single-family Dwelling	Y	N
Two-family Dwelling	Y	N
Multi-family Dwelling	Y	Y
Attached Single-Family Dwelling	Y	Y
Live-work Unit	Y	Y
Mobile Home	N	N
Watchman/Service Quarters	N	N
Family Day Care Home	L	Y*
	LB1	DIZ
Group Residential uses		
Rooming House	S	N
Convent, Rectory, or Monastery	Y	N
Dormitory	S	Y*
Fraternity or Sorority	S	N
Adult Family Home	L	Y*
Foster Homes		
Foster Family Home	Y	Y
Small Foster Home	L	Y
Group Home or Group Foster Home	L	Y
Shelter Care Facilities		
Family Shelter Care Facility	Y	Y
Small Group Shelter Care Facility	L	Y*
Large Group Shelter Care Facility	S	Y*
Community Living Arrangement	L	Y*
Transitional Living Facility	S	N
	LB1	DIZ
Educational Uses		
Day Care Center	S	Y* (drop off and queuing must be on site)
School, Elementary or Secondary	S	Y
College	Y	Y
School, Specialty or Personal Instruction	Y	Y
	LB1	DIZ
Community-Serving Uses		
Library	Y	Y
Cultural Institution	Y	Y
Community Center	S	Y*
Religious Assembly	S	Y*
Cemetery or Other Place of Interment	N	N
Public Safety Facility	Y	Y
Correctional Facility	N	N
	LB1	DIZ
Commercial and Office Uses		
General Office	Y	Y
Government Office	Y	Y
Bank or Other Financial Institution	Y	Y
Currency Exchange, Payday Loan Agency, or Title Loan Agency	S	N
Installment Loan Agency	S	N

Retail Establishment, General	L	Y
Garden Supply or Landscaping Center	Y	Y
Home Improvement Center	S	Y
Secondhand Store	S	Y*
Outdoor Merchandise Sales	S	Y*
Artist Studio	Y	Y
Adult Retail Establishment	N	N
	LB1	DIZ
Health Care and Social Assistance Uses		
Medical Office	Y	Y
Health Clinic	S	Y
Hospital	S	Y
Medical Research Laboratory	S	Y
Medical Service Facility	S	N
Social Service Facility	S	Y*
Emergency Residential Shelter	S	N
Nursing Home	Y	Y
	LB1	DIZ
General Service Uses		
Personal Service	Y	Y
Business Service	Y	Y
Building Maintenance Service	S	Y*
Catering Service	Y	Y
Funeral Home	Y	Y
Laundromat	Y	Y
Dry Cleaning Establishment	Y	Y
Furniture and Appliance Rental and Leasing	Y	Y
Household Maintenance and Repair Service	Y	Y
Tool/Equipment Rental Facility	Y	Y
Animal Services		
Animal Hospital/Clinic	L	Y
Animal Boarding Facility	L	Y* (all services must be performed indoors)
Animal Grooming or Training Facility	L	Y (all services must be performed indoors)
	LB1	DIZ
Motor Vehicle Uses		
Light Motor Vehicle		
Sales Facility	S	Y*
Rental Facility	L	Y*
Repair Facility	S	Y*
Body Shop	S	Y*
Outdoor Storage	S	N
Wholesale Facility	L	N
Heavy Motor Vehicle		
Sales Facility	S	N
Rental Facility	S	N
Repair Facility	N	N
Body Shop	N	N
Outdoor Storage	N	N
General Motor Vehicle		
Filling Station	S	N
Car Wash	L	Y*
Drive-through Facility	L	Y*
Parking		
Parking Lot, Principal Use	Y	Y* (if developed as shared parking)
Parking Lot, Accessory Use	Y	Y

Parking Structure, Principal Use	L	Y (if developed as shared parking)
Parking Structure, Accessory Use	Y	Y
Heavy Motor Vehicle Parking Lot, Principal Use	S	N
Heavy Motor Vehicle Parking Lot, Accessory Use	S	N
	LB1	DIZ
Accommodation and Food Service Uses		
Bed and Breakfast	Y	Y
Hotel, Commercial	Y	Y
Hotel, Residential	Y	Y
Tavern	Y	Y
Assembly Hall	S	Y*
Restaurant, Sit-down	Y	Y
Restaurant, Fast-food / Carry-out	L	Y* (queuing must be handled onsite)
	LB1	DIZ
Entertainment and Recreation Uses		
Park or Playground	Y	Y
Festival Grounds	N	N
Recreation Facility, Indoor	Y	Y
Recreation Facility, Outdoor	S	Y*
Health Club	Y	Y
Sports Facility	S	N
Gaming Facility	N	N
Theater	Y	Y
Convention and Exposition Center	S	Y*
Marina	Y	N
Outdoor Racing Facility	N	N
Adult Entertainment Establishment	N	N
	LB1	DIZ
Storage, Recycling, and Wholesale Trade Uses		
Recycling Collection Facility	S	N
Mixed-waste Processing Facility	N	N
Material Reclamation Facility	N	N
Salvage Operation, Indoor	N	N
Salvage Operation, Outdoor	N	N
Wholesale and Distribution Facility, Indoor	L	N
Wholesale and Distribution Facility, Outdoor	S	N
Storage Facilities		
Indoor	L	N
Outdoor	S	N
Hazardous Materials	N	N
	LB1	DIZ
Transportation Uses		
Ambulance Service	S	N
Ground Transportation Service	S	N
Passenger Terminal	Y	N
Helicopter Landing Facility	S	N
Airport	N	N
Ship Terminal or Docking Facility	N	N
Truck Freight Terminal	N	N
Railroad Switching, Classification Yard, or Freight Terminal	N	N

	LB1	DIZ
Industrial Uses		
Manufacturing, Light	L	Y* (limited use standards apply: see below)
Manufacturing, Heavy	N	N
Manufacturing, Intense	N	N
Research and Development	S	Y
Processing or Recycling of Mined Materials	N	N
Contractor's Shop	L	N
Contractor's Yard	S	N
	LB1	DIZ
Agricultural Uses		
Plant Nursery or Greenhouse	N	N
Raising of Crops or Livestock	N	N
	LB1	DIZ
Utility and Public Service Uses		
Broadcasting or Recording Studio	Y	Y
Transmission Tower	L	Y (limited use standards apply: see below)
Water Treatment Plant	Y	N
Sewage Treatment Plant	N	N
Power Generation Plant	N	N
Substation/Distribution Equipment, Indoor	S	N
Substation/Distribution Equipment, Outdoor	L	N
	LB1	DIZ
Temporary Uses		
Seasonal Market	L	Y (limited use standards apply: see below)
Temporary Real Estate Sales Office	L	Y (limited use standards apply: see below)
Concrete Batch Plant, Temporary	L	N
Live Entertainment Special Event	L	Y (limited use standards apply: see below)
Other		
Off premise signs		N
Type B signs		N

Notes:

1. * = subject to Public Hearing and approval by City Plan Commission
2. All existing uses are allowed to continually operate as is

Limited Use Standards for certain uses within the South 27th Street DIZ (source: City of Milwaukee zoning code, Ch. 295-603.2):

Light Manufacturing:

1. The gross floor area devoted to the use shall not exceed 3,600 square feet.
2. The use shall not operate between the hours of 9 p.m. and 7 a.m.
3. The use shall not generate noise or odors in violation of ch. 80.
4. All manufacturing activities shall occur within an enclosed building.

Transmission Tower:

1. The tower shall comply with the applicable provisions of s. 295-413.
2. The tower does not exceed the district height limit or the tower is accessory to an elementary or secondary school and does not exceed 2 times the district height limit or 150 feet, whichever is less, and is set back from all property lines a distance at least equal to the height of the tower. Any other tower which does not exceed 2 times the district height limit or 150 feet, whichever is less, may be allowed as a special use. All other towers are prohibited.

Seasonal Market:

1. The activity shall be located on property owned or leased by the operator of the seasonal market. Alternatively, the market operator may furnish the department with written evidence that the property owner has given the operator permission to use the premises for a seasonal market.
2. If flowers, plants, Wisconsin-grown farm products or Christmas trees constitute at least 75% of the merchandise offered for sale, the activity shall be limited to not more than 90 days in one calendar year. Otherwise, the duration of the seasonal market shall be limited to not more than 14 days in one calendar year.
3. The activity shall not produce glare, spill light or noise in violation of the provisions of ch. 80.
4. Signage shall be limited to not more than 2 signs and a total display area of 16 square feet for all signs combined.
5. Sales shall not occur between the hours of 9 p.m. and 7 a.m.
6. The site shall be restored to its previous condition following termination of the market operation.

Temporary Real Estate Sales Office:

1. The sales office and any associated model homes or units shall be open only until the homes or units specifically being marketed are sold out.
2. Signage shall comply with the requirements of s. 295-407 and the sign regulations of subch. 5.
3. Customer-accessible restrooms shall be provided.
4. An occupancy permit shall not be required for a temporary real estate sales office meeting the requirements of this paragraph.

Live Entertainment Special Event:

1. If the event is to occur on the public right-of-way or other public property, the person, firm or organization coordinating the event shall obtain a special event permit in accordance with s. 105-55.5.
2. The person, firm or organization coordinating the event shall obtain a festival permit, if required to do so by s. 261-103.
3. If the event will include carnival rides, the property owner or carnival operator shall obtain a carnival site permit in accordance with s. 87-14.
4. The event shall be located on property owned or leased by the person, firm or organization that is coordinating it. Alternatively, such person, firm or organization may furnish the department with written evidence that the property owner has given the operator permission to use the premises for a live entertainment special event.

DRAFT

Development Incentive Zone Guidelines

Exhibit B

S. 27th & Howard

DRAFT

This document contains design standards for a Development Incentive Zone, (DIZ), bounded by W. Loomis Drive, W. Howard Avenue, the east side of S. 27th St. and adjacent to Wilson Creek. The site is located in an area of a wide variety of uses which includes small scale commercial development, big box retailers, strip centers, multi-family housing, institutional uses, and a major hospital.

A Development Incentive Zone (DIZ) is a form of a zoning overlay district. Development Incentive Zones are established to provide timely review of projects with unique conditions. For each DIZ, standards are prepared to provide clear direction and encourage design excellence. The standards are presented with principles, which emphasize compatibility of new development with surrounding areas and provide flexibility based on site specific conditions.

EXISTING CONDITIONS

1. Outlot area and former automobile dealership, now vacant
2. Restaurant with drive-thru and sit-down service
3. South Towne Center, general retail
4. Mobile Home Park
5. Wildenberg Hotel
6. Used automobile dealership, now vacant
7. CVS Pharmacy
8. Vacant lot

The urban form of this corridor is characterized by large parcels and one-story aging structures with significant setbacks, underutilized surface parking, minimal landscaping, and inadequate pedestrian circulation. Recent vacancies of auto dealerships have contributed to a decline in the appearance of the corridor and threaten its vitality. Several areas within the corridor have significant challenges for full-scale redevelopment due to constraints such as lot depth, site area, and quality or obsolescence of existing development.

An overall lack of adequate landscaping, screening, and parking spaces that directly abut the sidewalk detracts from the public realm.

The older buildings in the overlay district are economically under-performing. The strip mall is near full occupancy; however, inferior parking circulation, and poor building and landscape maintenance detract from its appearance. The rear of the building lacks screening, which presents an unattractive view to the residential area across Wilson Creek. The Wildenberg Hotel suffers from lack of maintenance and overgrown landscaping. Adjacent to the hotel is a dense and relatively well-kept mobile home community. The fast food restaurant and new pharmacy both have drive-thru services. A former auto dealership is now re-used as a recently opened used car sales operation.

Infill and redevelopment are expected to provide significant benefits to the community. Infill development has the advantages of re-using an underutilized or vacant building site where existing infrastructure will be in place. Importantly, the use of an existing site is a sustainable tool that does not place new demands and costs for land, infrastructure, energy, and maintenance.

S. 27th Street frontage - existing conditions

Howard Ave frontage - existing conditions with vacant lot

General standards in five areas are established for new development, redevelopment, and existing conditions:

I. Building Placement

   A. Existing Buildings

   B. New Buildings, Alterations and Additions

II. Building Design

   A. Massing

   B. Facades

   C. Materials

III. Access, Circulation and Parking

   A. Pedestrian and Bicycle Accommodations

   B. Circulation

   C. Parking Areas

IV. Site Improvements

   A. Amenities

   B. Landscaping

   C. Fencing and Screening

   D. Lighting

V. Signage

This document contains both principles and standards. Principles describe the broader objectives of each topic. The standards specify how to achieve the principles. Any development proposals must always follow the principles and meet the standards.

DRAFT

I. Building Placement

Principles

Locate outlot buildings closer to the street edge to minimize vast front parking lots

Position buildings to provide parking opportunities on the sides of buildings

Position buildings to provide opportunities to create public spaces, safer walkways and landscaping

Position buildings to allow a unifying landscaped perimeter for the entire site

Position buildings to allow landscaping to face Wilson Creek and complement potential naturalization of this waterway

Buildings should complement the context in which they are built

Standards

A. Existing buildings

1. Renovate, rehabilitate or retrofit existing buildings to aesthetically improve and visually integrate the site and surrounding buildings.
2. Seek opportunities to create public spaces.
3. Renovate parking configuration to allow linear perimeter landscaping.

Create outdoor dining additions using existing structures

B. New Construction, Building Additions and Alterations

1. Establish outlot commercial development in underutilized parking areas, closest to primary street frontage.

Potential placement of outlot development

2. Orient the front of new buildings and/or building entrances to the primary streets of 27th St. or Howard Ave.

3. 70% of the primary façade shall face either 27th St. or Howard Ave. frontage.

4. The maximum building setback is 70 feet from the front property line to the building.

Exceptions to exceed the maximum building setback are allowed where:

- Outlot buildings are provided and do not exceed the maximum front setback requirements, and sustainable elements are incorporated in the building's that exceed the maximum setback. Acceptable sustainable elements include one or more of the following: solar panels, green roof *or* high-albedo roof on at least 90% of roof area. Other green technologies that contribute toward a *LE*ED certification may be considered, and

- The development site will contain additional facilities for the handling or treatment of stormwater runoff.

II. Building Design

Principles

Building design must reinforce a cohesive aesthetic appearance that complements adjacent properties and establishes this area as a destination of choice

Building facades must be articulated to provide visual interest

Building materials for new development or redevelopment must be of high quality and new developed materials and recycled materials are encouraged

Special building design consideration must be given to protect and enhance the quality of life for established residential areas within and adjacent to the project area

Standards for New Construction, Building Additions and Alterations

A. Massing

1. Establish hierarchy between building elements by establishing a base, middle and top to the front elevation of buildings. Exceptions to establish a base, middle and top may be allowed provided the new structure:

- Features a glass curtain wall, or
- Features massing of a single material combined with glass, and
- Uses materials which complement structures on the adjacent parcels

2. The maximum allowable height of new buildings is 90 feet. Entry features and tower elements integrated with the building may not exceed the maximum height.

3. The minimum allowable height of new construction and additions to buildings is 22 feet, provided that prominent architectural elements should be integrated to project above the front façade of a building averaging 22 feet in height.

4. No one tenant/retailer shall exceed a building footprint of 100,000 s.f. to prohibit the development of one single superstore.

Examples of desirable facades with clearly defined base, middle and top; the Apple store provides an example of allowable unique architecture that does not have a clearly defined base, middle and top

B. Facades

1. Front facades shall be oriented to the primary street frontage, either S. 27th St., or Howard Ave. Where this is not possible, use materials of a similar type and quality on the primary street frontage as the front façade.

2. Unarticulated walls facing S.27th and Howard Streets are not permitted. Modulate facades visible from public streets with articulated bays, windows and openings, varying color and texture and/or other articulated details that relate to the human scale.

C. Materials

1. All front walls visible from 27th St. or Howard Ave. must contain the most architecturally significant materials and fenestration. Significant building materials include decorative masonry and block, brick, cut stone, glass, architecturally-finished metal cladding and architectural pre-cast concrete panels. Exterior insulation finish systems (EIFS) cannot be used on the base of the building and may not be used on the lower one/third from the base of the building.

2. 75% of glazing on the first floor of commercial buildings and entrances must be transparent glass. Low-emissivity (Low-E) glass coatings with no tint may be used. Opaque glazing cannot be substituted for vision glass where vision glass is required, but may be used in other areas as an architectural element if it is compatible with the overall design.

Standards for Existing Buildings

It is recommended that existing facades and materials be regularly maintained to achieve maximum aesthetic appearance. If facades are updated, the standards for alterations must be followed.

III. Access, Circulation and Parking

Principles

The site must support multiple modes of transportation - automobile, transit , bicycle, or pedestrian

Facilitate connections between adjacent parking lots and seek to establish greater connections with the neighborhood

Where possible, new curb cuts on 27th Street are discouraged

Enhance opportunities for landscape – within parking lots and along perimeter, especially along the back (to minimize parking contaminants from entering Wilson Creek)

Provide safe and accessible movement for pedestrians and bicyclists. Provide safe and well-lit parking for bicycles

Visually create smaller surface parking areas with landscape screening along the street edge and in the interior

Improve and landscape screen existing surface parking areas

Standards for New Construction, Building Additions and Alterations

A. Pedestrian and Bicycle Accommodations

1. Pedestrian walkways from parking areas to building entrances must be at least 5 feet wide and delineated in a different but durable material or color than the parking lot surface.

2. Provide weather protection features constructed parallel to the facade within 30 feet of all customer entrances.

3. Provide safe pedestrian connections between public sidewalks, transit stops and customer entrances.

4. Provide secure and clearly designated areas and racks for bicycle parking near entrances within 40 feet of building entrances. Bicycle parking areas must be lit at night. It is recommended that bicycle parking areas be covered.

B. Vehicular Circulation

1. Locate drive aisles to provide access between parcels and create linkages to surrounding uses.

2. Surface parking areas provide curbed, landscaped islands to visually divide the lot and provide pedestrian safety. Curbed, landscaped islands may have curb cuts for stormwater infiltration if desired and properly maintained.

Examples of safe pedestrian crosswalk and parking island landscaping

3. Visually screen delivery areas from view of residential areas by planting street-type trees no greater than 50 feet on center.

C. Parking Areas

1. Provide a functional circulation pattern by organizing the parking areas in relationship to the building.

2. Provide ground level retail space in parking structures.

3. The maximum number of parking stalls for new general retail establishments is 5 stalls per 1000 sq. ft. of gross floor area. The maximum may be exceeded if either the landscape screening buffer area along the principal street (S. 27th St and Howard Ave), or the green border in the right-of-way on S. 27th St. is increased by a width of 2 feet, and additional landscape screening consisting of a combination of trees and shrubs is placed within the area. The increased landscape area shall run the length of the surface parking area where the maximum parking ratio is exceeded.

4. Locate parking areas mid-block instead of at corners.

5. Provide shared parking where feasible.

Examples of building placement, tree landscaping, safe pedestrian crosswalk and parking island landscaping

Standards for Existing Buildings

A. Pedestrian and Bicycle Accommodations

1. Ensure that pedestrians have safe access to public entries, especially when pedestrians must cross vehicular traffic areas. This may be achieved by pedestrian walkway striping in parking areas. Materials and/or colors used must contrast with pavement.

2. Provide easily visible bicycle racks in well-lit spaces.

B. Vehicular Circulation

1. Provide for future connections to adjacent properties, especially if re-striping or reconfiguring a parking area.

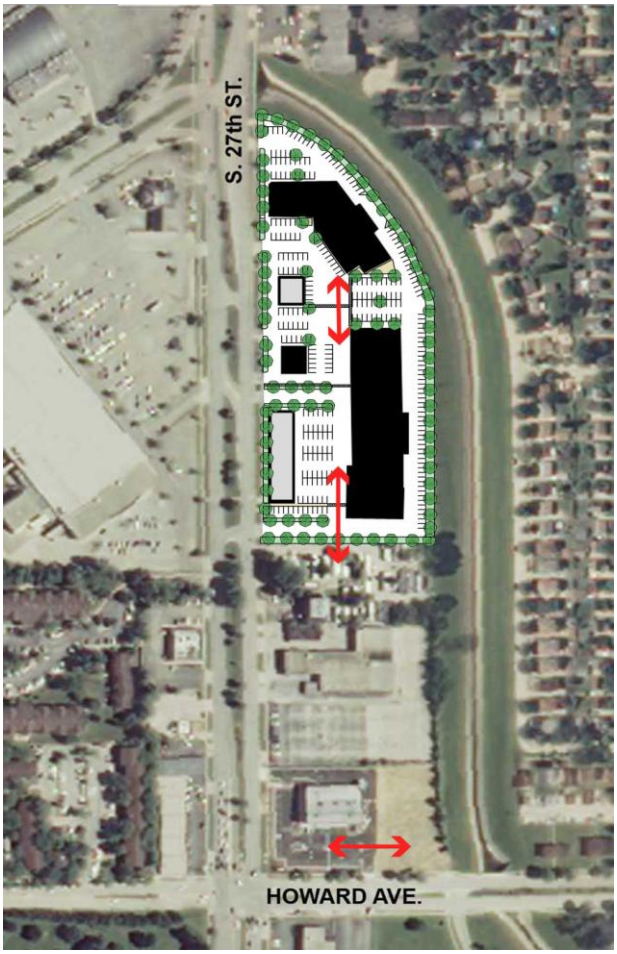

Examples of future vehicle connections

C. Parking Areas

1. Add landscape screening to the rear parking and delivery areas along Wilson Creek by cutting out a parking space to accommodate the planting of a street-type tree no greater than 50 feet on center. Ensure trees are planted no closer than 20 feet to light fixtures.

2. Provide for future connections to adjacent properties, especially if re-striping or reconfiguring a parking area.

IV. Site Improvements

Principles

Establish this area as a destination of choice by enlivening public spaces through a variety of outdoor spaces, public art and amenities, and/or landscape

Create a cohesive aesthetic appearance by coordinating site improvements across parcels

Use site elements to reinforce visual street edges, corners and drive aisles

Choose locations for landscape features to maximize opportunities to treat stormwater and reduce urban heat island effect

Standards for New Construction, Building Additions and Alterations

A. Amenities

1. Public spaces, which include outdoor cafés, courtyards or plazas, are recommended. These are to be located in highly visible areas, such as building entries, or along 27th Street and Howard Ave.

2. Provide site amenities, which may include public art, in public spaces or landscaped areas.

3. Site amenities, such as benches, bike racks, trash receptacles, light fixtures, planters, etc., are to be coordinated throughout parcels.

Examples of parking lot art and landscaping

B. Landscaping

1. Reinforce the street edges along 27th St. and Howard Ave. using landscaping planted within a minimum 5 foot wide perimeter landscape strip at the property line (which may encroach into the public right of way). Fences are optional in the 5 foot wide perimeter landscape strip.

2. Surface parking areas shall provide interior landscaped curbed islands to visually divide the lot. Each landscaped island in a parking lot shall measure at least 150 square feet in area and 3 feet deep.

4. Use a combination of ornamental and native plant species for perimeter landscaping and landscaped parking islands.

5. Developers and commercial property owners may plant trees in the tree border, as long as they are not closer than 40 feet from an existing tree. Use the Department of Public Work's (DPW) Forestry's plant list. This will require a permit from DPW and is subject to DPW review.

6. In parking areas located within the front setback area, no parking space shall be located more than 70 feet from a landscaped area.

7. Each landscaped island shall include at a minimum:

- one deciduous tree, minimum caliper of 2.5 inches, AND
- one shrub (2 feet minimum height at time of planting) OR one native or ornamental grass (minimum 2 gallon size container) AND
- ten groundcover plants (minimum 2 inch container) or perennials (minimum 4.5 inch container)

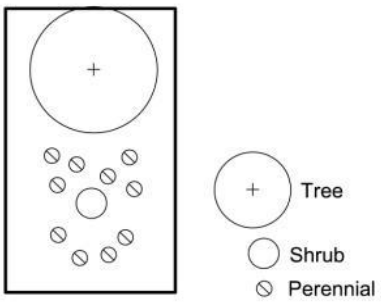

8. When desirable, materials associated with pervious pavement should be used to enhance landscaping and stormwater management techniques.

C. Fencing and Screening

Trees planted facing Wilson Creek screen delivery areas

1. Provide a continuous 10 foot deep landscaped buffer at the rear of the property facing Wilson Creek.

Exception: the buffer area may be reduced provided that a landscape easement is granted and approved for a landscape buffer within the adjacent property owned by MMSD.

2. Landscaping at the rear lot line should consist of trees with shrubs. Shrubs should be 3 feet high and trees should be at least 2.5 inch caliper at time of planting.

Plant 2 staggered rows of shrubs every 20 feet on center.

Plant trees every 50 feet on center.

3. Screen mechanical systems and trash areas from view from the public right of way with fencing and/or landscaping. When using shrubs, the minimum height must be at least the same height as the screened area.

D. Lighting

1. Use exterior lighting to enhance the architectural elements of buildings facing S.27th St. and Howard Ave.

2. Light poles within parking areas may not exceed 30 feet in height. Lower height pedestrian lighting is encouraged along pedestrian walkways.

3. Incorporate similar or compatible light pole and fixture throughout properties as each is developed.

Standards for Existing Buildings

Amenities

1. Public spaces, which include outdoor cafés, courtyards or plazas, are recommended. These are to be located in highly visible areas, such as building entries, or along 27th Street and Howard Ave.

2. Provide site amenities, which may include public art, in public spaces or landscaped areas.

Landscaping, Fencing and Screening

1. Add landscape screening to the rear parking and delivery areas along Wilson Creek by cutting out a parking space to accommodate the planting of a street-type tree no greater than 50 feet on center. Ensure trees are planted no closer than 20 feet to light fixtures.

2. Screen mechanical systems and trash areas from view from the public right of way with fencing and/or landscaping. When using shrubs, the minimum height must be at least the same height as the screened area.

3. Maintain existing landscaped areas with shrubs at least 3 feet tall planted 8 feet on center. Replace dead or dying vegetation.

Lighting

1. Use exterior lighting to enhance the architectural elements of buildings facing S.27th St. and Howard Ave.

2. Light poles within parking areas may not exceed 30 feet in height. Lower height pedestrian lighting is encouraged along pedestrian walkways.

3. Incorporate similar or compatible light pole and fixture throughout properties as each is developed.

V. Signage

Principles

Lower height signs set below the tree canopies are easily visible to drivers of vehicles, bicycles and pedestrians

Monument signs using high-quality materials help to establish this as a destination of choice

When there is a change in use, all new sign standards must be met

Since there are multiple property owners, when feasible, use project identification signage to unify the development

Standards for New Construction, Building Additions and Alterations

1. Locate freestanding monument signs at major entrances on S. 27th St. or W. Howard Ave. If monument signs are below a height of 14 feet, then one additional monument sign may be used, if desired.
2. Type A freestanding signs only.
3. For each development, an inclusive tenant sign and directional signs are permitted.

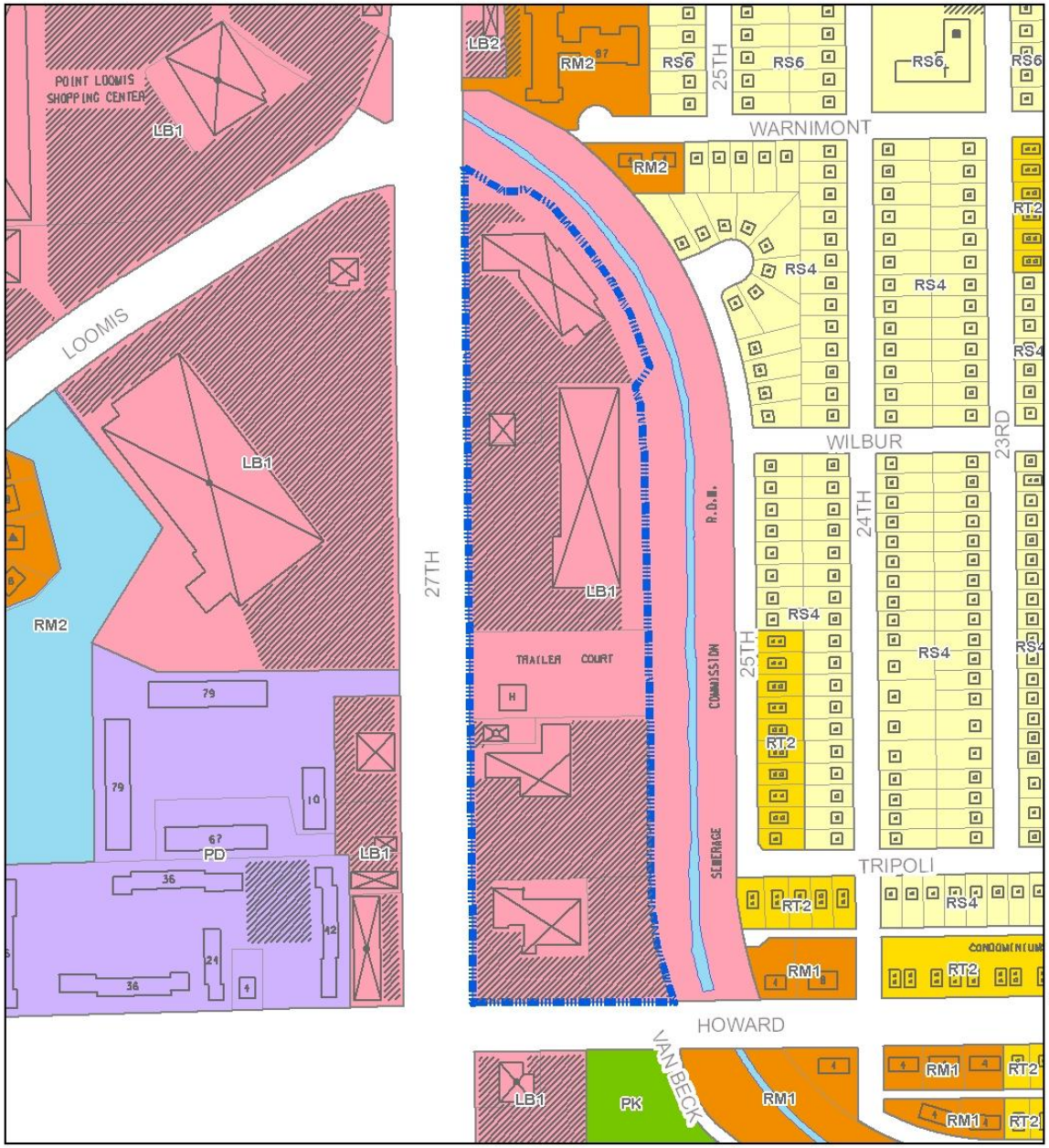

FN 090919
Establish a Development Incentive Zone
October 2010

Proposed Zoning Change

Residential Districts

- Single Family (RS1-6)
- Two-Family (RT1-4)
- Multi-Family (RM1-7)
- Residential and Office (RO1-2)

Commercial Districts

- Neighborhood Shopping (NS1-2)
- Local Business (LB1-2)
- Commercial Service (CS)
- Regional Business (RB1-2)
- Central Business (C9A-C9H)

Industrial Districts

- Industrial - Office (IO)
- Industrial - Light (IL1-2)
- Industrial - Mixed (IM)
- Industrial - Heavy (IH)

Special Districts

- Parks (PK)
- Institutional (TL)
- Planned Development (PD, DPD)
- Redevelopment (RED)

N

0 230 460 920 Feet

Data source: Department of City Development 2009

October 20, 2010

To the Honorable Members of the
Zoning, Neighborhoods and Development Committee
City of Milwaukee
City Hall, Room 205

Dear Committee Members:

File No. 090919 establishes a Development Incentive Zone (DIZ) overlay boundary on land located generally along the east side of South 27th Street between West Howard Avenue and West Loomis Road, in the 13th Aldermanic District.

This file establishes a Development Incentive Zone and approves Exhibit A relating to permitted and prohibited uses and Exhibit B relating to performance standards. The performance standards include principles and standards for building placement (for existing buildings, as well as new buildings, alterations and additions); building design (massing, facades, and building materials); access, circulation and parking (including pedestrian and bicycle accommodations, circulation, and parking areas); site improvements (including amenities, landscaping, fencing and screening, and lighting); and signage. This site is identified as a catalytic project in the Southwest Side Comprehensive Area Plan.

On October 18, 2010, a public hearing was held and at that time nobody spoke in opposition. Since the proposed change is consistent with the recommendations of the Southwest Side Comprehensive Area Plan, the City Plan Commission at its regular meeting on October 18, 2010 recommended approval of the subject file.

Sincerely,

Rocky Marcoux
Executive Secretary
City Plan Commission of Milwaukee

cc: Ald. Terry Witkowski

NOTICES SENT TO FOR FILE : 090919

NAME	ADDRESS	DATE NOTICE SENT		
Rocky Marcoux	DCD	11/9/10		
Ald. Witkowski	CC-CC			
See attached list				

COLONIAL VILLAGE LLC
125 N EXECUTIVE DR STE 309
BROOKFIELD WI 530056035

COLONIAL VILLAGE, TOWNE REALTY
710 N PLANKINTON AV 10TH FL
MILWAUKEE WI 53203

DARWIN CHENTNIK
3416 S 27TH ST
MILWAUKEE WI 53215

ELEONORE L KLUG
5817 W WASHINGTON BLVD
MILWAUKEE WI 53208

GIUFFRE IV LLC
445 W OKLAHOMA AV
MILWAUKEE WI 53221

JOHN FOSTER, BETTY FOSTER
13530 TERRYWOOD CT
NEW BERLIN WI 53151

SCP 2009 C32 084 LLC
ONE CVS DRIVE
WOONSOCKET RI 02895

Easy Peel Labels
Use Avery® TEMPLATE 5960™

Feed Paper

See Instruction Sheet
for Easy Peel Feature

AVERY® 5960™

Étiquettes faciles à peler
Utilisez le gabarit AVERY® 5960™

Sens de chargement

Consultez la feuille
d'instruction

www.avery.com
1-800-GO-AVERY

INSIDE ZIP 60609 City Office FN

Easy Peel Labels
Use Avery® TEMPLATE 5960™
Feed Paper
See Instruction Sheet
for Easy Peel Feature
AVERY® 5960™

27TH AND HOWARD LLC
PO BOX 11737
MILWAUKEE WI 53211

GIRAFFE PROPERTIES LLC
C/O TOYS R US
ONE GEOFFREY WAY
WAYNE JN 07470

JOHN L LIPKA & IRENE LIPKA
2425 W TRIPOLI AV
MILWAUKEE WI 53221

2B PROPERTIES LLC
540 W MANOR CR
MILWAUKEE WI 53217

GOOD MOOSE LLC
2652 N LINCOLN
CHICAGO IL 60614

LAWRENCE TOMOVICH
LISA A TOMOVICH
2503 W WARNIMONT AV
MILWAUKEE WI 53221

ARLIE T RATLIFF
SUSAN R RATLIFF
3620 S 25TH ST
MILWAUKEE WI 53221

GREGG KASCH
3700 S 25TH ST
MILWAUKEE WI 53221

LOOMIS CENTRE LLC
MJR NLR JUDITH LOOMIS LAND
540 LAKE COOK RD, #180
DEERFIELD IL 60015

BADZINSKI FRANK
3666 S 25TH ST
MILWAUKEE WI 53221

GREGORY KUCKES
DANNIE L KUCKES
3632 S 25TH ST
MILWAUKEE WI 532211430

MARIA E MELENDEZ
3728 S 25TH ST
MILWAUKEE WI 532211432

BFS RETAIL & COMMERCIAL
OPERATIONS LLC
333 E LAKE ST
BLOOMINGDALE IL 60108

HOLZMAN-SWANSON
WARNIMONT LLC
2832 WOODLAND
NORTHBROOK IL 60062

MARIA L ALCANTAR NKA
MARIA L MONJE
3714 S 25TH ST
MILWAUKEE WI 53221

CRISTINA G SANCHEZ AGUILAR
JAIME FLORES
2431 W TRIPOLI AV
MILWAUKEE WI 53221

JASON KADRICH
3628 S 25TH ST
MILWAUKEE WI 53221

MARJORIE ALTSTADT TRUSTEES
ALTSTADT FAMILY TR D2-23-99
3640 S 25TH ST
MILWAUKEE WI 53221

DONALD C GIDLUND
JANICE L GIDLUND
3708 S 25TH ST
MILWAUKEE WI 53221

JDN REALTY CORPORATION
C/O PROPERTY TAX
3300 ENTERPRISE PKWY
BEACHWOOD OH 44122

MARTHA MARTINEZ
3674 S 25TH ST
MILWAUKEE WI 53221

FLOYD F MEYER & AUDREY HW
3762 S 25TH ST
MILWAUKEE WI 53221

JEFFREY & MARLENE MAXWELL
3636 S 25TH ST
MILWAUKEE WI 53221

MARY JANE KOEHLER
RICHARD KOEHLER
3824 S 25TH ST
MILWAUKEE WI 53221

GARY D OBERLANDER
KATHRYN A OBERLANDER
3748 S 25TH ST
MILWAUKEE WI 532211432

JENNIFER BERGERSEN
BRIAN BERGERSEN
3736 S 25TH ST
MILWAUKEE WI 53221

METROPOLITAN ASSOCIATES FKA
METROPOLITAN HOLDING CO
1123 N ASTOR ST
MILWAUKEE WI 53202

GERALD & FRANCINE KNEPPER
LIVING TRUST
3624 S 25TH ST
MILWAUKEE WI 53221

JEROME A KNIPPLE & KATHRYN
4655 S 51ST ST
MILWAUKEE WI 53220

MICHAEL BONTEMPO
JANEEN BONTEMPO
3612 S 25TH ST
MILWAUKEE WI 532211430

Étiquettes faciles à peler
Utilisez le gabarit AVERY® 5960MC
Sens de chargement
Consultez la feuille d'instruction
www.avery.com
1-800-GO-AVERY

Étiquettes faciles à peler
Utilisez le gabarit AVERY® 5960™
Sens de chargement
Consultez la feuille d'instruction
www.avery.com
1-800-GO-AVERY

MILWAUKEE CO PARKS
ATTN: JIM CHIA
9480 WATERTOWN PLANK RD
WAUWATOSA WI 53226

MILWAUKEE SEWERAGE COMM
35 N WATER ST
MILWAUKEE WI 53202

MONICA KELLY
742 S 25TH ST
MILWAUKEE WI 532211432

PAUL R STUEDEMANN
2424 W TRIPOLI AV
MILWAUKEE WI 53221

RICARDO ROBLES
ELENA ROBLES
3768 S 25TH ST
MILWAUKEE WI 53221

ROAD REAL ESTATE LLC
8859 LONG ST
LENEXA KS 66215

ROBERT M O'CONNELL
S29W29925 S BETHESDA CIR
WAUKESHA WI 53186

ROMAN A GUERRERO
JOSEFINA MUNOZ
3722 S 25TH ST
MILWAUKEE WI 53221

SALEH M SALEM
GRISELDA SALAM
3776 S 25TH ST
MILWAUKEE WI 53221

SALVADOR R ZUNIGA
3800 S 25TH ST
MILWAUKEE WI 53221

SCOTT T IVERSON
AIMEE M IVERSON
3782 S 25TH ST
MILWAUKEE WI 53221

SHORE HAVEN LTD PARTNERSHIP
C/O MICHAEL BEST & FRIEDRICH
100 E WISCONSIN AV, 32ND FL
MILWAUKEE WI 53202

SML PARTNERSHIP LLC
C\O EUGENE KLURFELD
10030 N VINTAGE DR
MEQUON WI 53092

SOUTHGATE SQUARE COMPANY
C\O REILLY-JOSEPH COMPANY
117 N JEFFERSON ST #202
MILWAUKEE WI 53202

STEVE G GAMROTH
ANN M GAMROTH
3810 S 25TH ST
MILWAUKEE WI 53221

TACO BELL OF AMERICA INC
C\O OTB #1630
P O BOX 35370
LOUISVILLE KY 403325370

TERRI L DEUTSCHER
3654 S 25TH ST
MILWAUKEE WI 53221

THE BANK OF NEW YORK MELLON
FKA THE BANK OF NEW YORK
7105 CORPORATE DR
PLANO TX 75024

THE OTTO FAMILY TRUST
JANICE SWINCICKI & JOHN OTTO
3616 S 25TH ST
MILWAUKEE WI 532211430

THOMAS A QUANDT
SUSAN E QUANDT
3660 S 25TH ST
MILWAUKEE WI 53221

Easy Peel Labels
Use Avery® TEMPLATE 5960™
Feed Paper
See instruction sheet for Easy Peel Feature
AVERY® 5960™

City of Milwaukee

200 E. Wells Street
Milwaukee, Wisconsin 53202

Legislation Details (With Text)

File #:	100737 **Version:** 0		
Type:	Resolution	**Status:**	In Committee
File created:	10/12/2010	**In control:**	ZONING, NEIGHBORHOODS & DEVELOPMENT COMMITTEE
On agenda:		**Final action:**	
Effective date:			
Title:	Resolution authorizing the execution of a Cooperation Agreement by and between the City of Milwaukee and the Redevelopment Authority of the City of Milwaukee for refinancing the Redevelopment Authority's Series 2001 Revenue Bonds and for financing The South End capital improvements project of Milwaukee World Festivals, Inc., in the 4th Aldermanic District.		
Sponsors:	THE CHAIR		
Indexes:	AGREEMENTS, REDEVELOPMENT AUTHORITY, REVENUE BONDS, SUMMERFEST		
Attachments:	Department of City Development Cover Letter.pdf, Hearing Notice List		

Date	Ver.	Action By	Action	Result	Tally
10/12/2010	0	COMMON COUNCIL	ASSIGNED TO		
11/9/2010	0	ZONING, NEIGHBORHOODS & DEVELOPMENT COMMITTEE	HEARING NOTICES SENT		

powered by Legistar™

..Number
100737
..Version
Substitute
..Reference

..Sponsor
Aldermen Murphy and Bauman
..Title
Substitute Resolution authorizing the execution of a Cooperation Agreement by and between the City of Milwaukee and the Redevelopment Authority of the City of Milwaukee for refinancing the Redevelopment Authority's Series 2001 Revenue Bonds and for financing The South End capital improvements project of Milwaukee World Festival, Inc., in the 4th Aldermanic District.
..Analysis
This resolution authorizes the execution of a Cooperation Agreement with the Redevelopment Authority providing for the issuance by the Authority of tax exempt revenue bonds that will finance the implementation of the Milwaukee World Festival Inc., South End Project. The Cooperation Agreement also expresses the City's commitment to provide credit enhancement for the 2010 Redevelopment Authority of the City of Milwaukee Redevelopment Revenue Bonds by providing a moral obligation pledge to be responsible for debt service.
Resolution
..Body
Whereas, City and Milwaukee World Festival, Inc. ("Festival") have entered into a Lease Agreement effective as of the 1st day of January 2001 as amended by a First Amendment dated as of February 1, 2005 and a Second Amendment dated as of January 6, 2010 ("Lease") for real property commonly known as the Henry Maier Festival Grounds; and
Whereas, The Lease provided for financing of a portion of the costs of Festival's Capital Improvements Program I through the issuance of tax-exempt bonds by the Authority in 2001; and
Whereas, The Lease also contemplates financing a portion of the costs of the South End Project through the issuance by the Authority of one or more additional series of tax exempt bonds (the "2010 Bonds"), and
Whereas, The Authority adopted Resolution No. 10243 on October 21, 2010 which was an initial resolution related to the issuance of the 2010 Bonds for the South End Project in an amount not to exceed $25 million; and
Whereas, The City and the Authority entered into a Cooperation Agreement dated as of the 21st day of June, 2001 and a First Supplement to Cooperation Agreement dated as of October 1, 2001 in order to provide credit enhancement for the 2001 bonds pursuant to which City agreed to provide a moral obligation pledge; and
Whereas, In order to provide credit enhancement for the 2010 Bonds, City desires to provide a moral obligation pledge ("Pledge") pursuant to the terms of the Cooperation Agreement attached to this file. The Pledge is to be structured consistent with City's budget process including a timetable for appropriation by City's Common Council, the reporting of events of defaults, and legislative action by City's Common Council. The Pledge shall create only financial obligations of the City which are subject to annual appropriation; now, therefore, be it

Resolved, That the Common Council of the City of Milwaukee hereby authorizes and directs the proper City officers to execute the Cooperation Agreement for Financing the Milwaukee World Festival, Inc. South End Project in the form attached to this file.

..Requestor
City Attorney
..Drafter
TOG:mll
November 15, 2010
1089-2010-2683:163306

City of Milwaukee Fiscal Impact Statement

Date 11/15/2010 File Number 100737 ◯ Original ⊗ Substitute

A Subject: Substitute Resolution Authorizing the Execution of a Cooperation Agreement for Refinancing The South End Capital Improvement Project of Milwaukee World Festival, Inc.

B Submitted By (Name/Title/Dept./Ext.): Thomas O. Gartner, Asst. City Atty X2621

C This File
- ◯ Increases or decreases previously authorized expenditures.
- ◯ Suspends expenditure authority.
- ◯ Increases or decreases city services.
- ◯ Authorizes a department to administer a program affecting the city's fiscal liability.
- ⊗ Increases or decreases revenue.
- ◯ Requests an amendment to the salary or positions ordinance.
- ◯ Authorizes borrowing and related debt service.
- ◯ Authorizes contingent borrowing (authority only).
- ◯ Authorizes the expenditure of funds not authorized in adopted City Budget.

D This Note ◯ Was requested by committee chair

E Charge To
- ◯ Department Account
- ◯ Capital Projects Fund
- ◯ Debt Service
- ◯ Other (Specify)
- ◯ Contingent Fund
- ◯ Special Purpose Accounts
- ◯ Grant & Aid Accounts

F

Purpose	Specify Type/Use	Expenditure	Revenue
Salaries/Wages			
Supplies/Materials			
Equipment			
Services			
Other			
TOTALS			

Form continued on following page.

For expenditures and revenues which will occur on an annual basis over several years check the appropriate box below and then list each item and dollar amount separately.

G

- ◯ 1-3 Years ◯ 3-5 Years
- ◯ 1-3 Years ◯ 3-5 Years
- ◯ 1-3 Years ◯ 3-5 Years

List any costs not included in Sections E and F above.

H

Milwaukee World Festival, Inc. will pay the City a fee for credit enhancement equal to 50 basis points per annum of the New Money Portion of the 2010 Bonds. The New Money Portion of the 2010 Bonds means an amount equal to the principal amount of the Bonds outstanding at the time of computation multiplied by a fraction, the numerator of which is the original amount of 2010 Bond proceeds less the required debt service reserve fund for the 2010 Bonds and less the amount of 2001 Bonds to be retired, and the denominator of which is the original aggregate principal amount of the 2010 Bonds.

Assumptions used in arriving at fiscal estimate.

I

Additional information.

J

GRANT F. LANGLEY
City Attorney

RUDOLPH M. KONRAD
LINDA ULISS BURKE
VINCENT D. MOSCHELLA
Deputy City Attorneys

CITY OF MILWAUKEE
Office of the City Attorney

THOMAS O. GARTNER
SUSAN D. BICKERT
STUART S. MUKAMAL
THOMAS J. BEAMISH
MAURITA F. HOUREN
JOHN J. HEINEN
DAVID J. STANOSZ
SUSAN E. LAPPEN
JAN A. SMOKOWICZ
PATRICIA A. FRICKER
HEIDI WICK SPOERL
KURT A. BEHLING
GREGG C. HAGOPIAN
ELLEN H. TANGEN
MELANIE R. SWANK
JAY A. UNORA
DONALD L. SCHRIEFER
EDWARD M. EHRLICH
LEONARD A. TOKUS
MIRIAM R. HORWITZ
MARYNELL REGAN
G. O'SULLIVAN-CROWLEY
KATHRYN Z. BLOCK
MEGAN T. CRUMP
ELOISA DE LEÓN
ADAM B. STEPHENS
KEVIN P. SULLIVAN
BETH CONRADSON CLEARY
THOMAS D. MILLER
JARELY M. RUIZ
ROBIN A. PEDERSON
DANIELLE M. BERGNER
CHRISTINE M. QUINN
Assistant City Attorneys

November 15, 2010

VIA ELECTRONIC MAIL

Ronald D. Leonhardt
City Clerk
ronald.leonhardt@milwaukee.gov

Linda Elmer
Staff Assistant
linda.elmer@milwaukee.gov

Willie Hines
Common Council President
willie.hines@milwaukee.gov

Alderman James Witkowiak
Chair, ZND
james.witkowiak@milwaukee.gov

Alderman Michael Murphy
Chair, Finance
michael.murphy@milwaukee.gov

Alderman Robert Bauman
robert.bauman@milwaukee.gov

Frank Nicotera
Milwaukee World Festival, Inc.
fnicotera@summerfest.com

Susan Landry
Milwaukee World Festival, Inc.
slandry@summerfest.com

W. Martin Morics
City Comptroller
Wally.morics@milwaukee.gov

Craig Kammholz
Deputy City Comptroller
craig.kammholz@milwaukee.gov

Rocky Marcoux
Executive Director RACM
rocky.marcoux@milwaukee.gov

Dave Misky
Assistant Executive Director RACM
david.misky@milwaukee.gov

Jim Scherer
DCD
jim.scherer@milwaukee.gov

Grant F. Langley
City Attorney
grant.langley@milwaukee.gov

David B. Ryan
dryan@foleylaw.com

Re: Common Council File No. 100737
(Substitute Resolution Authorizing the Execution of a Cooperation Agreement by and Between the City of Milwaukee and the Redevelopment Authority of the City of Milwaukee for Refinancing the Redevelopment Authority's Series 2001 Revenue Bonds and for Financing The South End Capital Improvements Project of Milwaukee World Festival, Inc. in the Fourth Aldermanic District)

Dear Ladies and Gentlemen:

Attached is a copy of Common Council Resolution File No. 100737, a City of Milwaukee Fiscal Impact Statement and a Cooperation Agreement for Financing the Milwaukee World Festival Inc., South End Project. Please note that Exhibit A to the Cooperation Agreement is a financing term sheet for this Project and the Moral Obligation Pledge to be provided by the City of Milwaukee in conjunction with the 2010 Bonds to be issued by the Redevelopment Authority.

This resolution is scheduled for consideration before the Zoning, Neighborhoods and Development Committee on September 16, 2010.

Very truly yours,

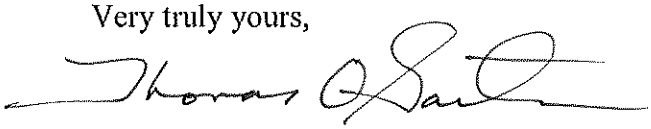

THOMAS O. GARTNER
Assistant City Attorney

TOG/mll:163310
Attachments

1089-2010-2683

COOPERATION AGREEMENT

For Financing The

MILWAUKEE WORLD FESTIVAL, INC.
SOUTH END PROJECT

CITY OF MILWAUKEE
AND
REDEVELOPMENT AUTHORITY
OF THE CITY OF MILWAUKEE

COOPERATION AGREEMENT
For Financing The
MILWAUKEE WORLD FESTIVAL, INC.
SOUTH END PROJECT

CITY OF MILWAUKEE
AND
REDEVELOPMENT AUTHORITY
OF THE CITY OF MILWAUKEE

THIS COOPERATION AGREEMENT made as of this _____ day of November, 2010, by and between the City of Milwaukee, a Wisconsin municipal corporation ("City"), and the Redevelopment Authority of the City of Milwaukee, a public body corporate, established pursuant to sec. 66.1333, Wis. Stats., ("RACM").

WITNESSETH:

WHEREAS, City and Milwaukee World Festival, Inc. ("Festival") have entered into a Lease Agreement effective as of the first day of January, 2001 as amended by a First Amendment dated as of February 1, 2005 and a Second Amendment dated as of January 6, 2010 ("Lease") for real property commonly known as the Henry Meier Festival Grounds; and

WHEREAS, the Lease provided for financing of a portion of the costs of the Capital Improvements Program I, as defined therein, through the issuance of tax-exempt bonds by RACM (the "2001 Bonds"); and

WHEREAS, the Lease also contemplated financing a portion of the costs of Capital Improvements Program II, as defined therein, (which project is currently known as the "South End Project") through the issuance by RACM of one or more series of tax-exempt bonds (the "2010 Bonds"); and

WHEREAS, RACM adopted Resolution No. 10243 on October 21, 2010 which was an initial resolution related to the issuance of redevelopment revenue refunding bonds and redevelopment revenue bonds for the South End Project in an amount not to exceed $25 million; and

WHEREAS, City and RACM entered into a Cooperation Agreement dated as of the 21st day of June, 2001 and a First Supplement to Cooperation Agreement dated as of October 1, 2001 in order to provide credit enhancement for the 2001 Bonds pursuant to which City agreed to provide a moral obligation pledge ("Pledge") to pay debt service on the 2001 Bonds; and

WHEREAS, RACM contemplates the issuance of up to $25 million Redevelopment Authority of the City of Milwaukee, Wisconsin, Redevelopment Revenue Bonds, Series 2010 (Summerfest Project), which bonds shall constitute the 2010 Bonds; and

WHEREAS, the proceeds of the 2010 Bonds shall be lent to Festival or to a special use entity established to assist in the financing of the South End Project (the "Borrower"); and

WHEREAS, RACM and City desire to enter into this Cooperation Agreement to evidence City's Pledge, as set forth in this Cooperation Agreement and more particularly described in the Term Sheet attached as EXHIBIT "A" (the "Term Sheet"), to enhance the marketability of the 2010 Bonds, achieve interest and expense savings and to finance a portion of the costs of the South End Project as contemplated by Festival; and

WHEREAS, although the 2010 Bonds will not constitute a legally-enforceable obligation of City, nor create debt on its behalf, there is no constitutional bar to present or future Mayors and Common Councils allocation or appropriation of such sums as may be necessary to restore balance in the Debt Service Reserve Fund to be established under the Indenture of Trust for the 2010 Bonds to the minimum Debt Service Reserve Fund Requirement in such Indenture; and

WHEREAS, the purpose of this Cooperation Agreement is to clearly delineate the procedures and circumstances under which present and future Mayors and Common Councils may act in order to provide assistance to RACM to further the redevelopment activities of RACM and economic development in City by loaning such funds to RACM as may be necessary to restore the minimum balance in the Debt Service Reserve Fund for the 2010 Bonds to the minimum Debt Service Fund Requirement; and

WHEREAS, RACM by Resolution No. _____ adopted November 18, 2010 authorized its Chair and Executive Director to execute this Cooperation Agreement on its behalf; and

WHEREAS, City by Resolution No. 100737 adopted on November 23, 2010 authorized the execution of this Cooperation Agreement on its behalf.

NOW, THEREFORE, RACM and City, in consideration of the premises and of the mutual promises and undertakings hereinafter contained, mutually agree as follows:

1. Moral Obligation of City. If the balance in the Debt Service Reserve Fund established under the Indenture is, as of the close of business on the day after the date on which the August 1 principal and interest payment on the Bonds is paid for any year, less than the Debt Service Reserve Fund Requirement (as defined in the Indenture), RACM shall so notify (or cause the Trustee to so notify) City's Comptroller, the Mayor and the Finance Committee of the Common Council in writing of such deficiency. City agrees to consider a loan to RACM, but solely in accordance with the procedures set forth in this Cooperation Agreement, of such sums as may be necessary to restore the balance in the Debt Service Reserve Fund to the minimum Debt Service Reserve Fund Requirement.

2. Procedure. Upon receipt by City's Comptroller of a notice that the balance in the Debt Service Reserve Fund is as of August 1st of any year less than the Debt Service Reserve Fund Requirement, the City's Comptroller shall:

(a) Request immediate allocation of contingent funding and/or contingent borrowing authority from the Mayor and Common Council of City in an amount sufficient to restore the Debt Service Reserve Fund to the Debt Service Reserve Fund Requirement. Such request shall be in writing and shall request the allocation of contingent funding and/or contingent borrowing authority to implement a loan to RACM to increase the balance in the Debt Service Reserve Fund to an amount not less than the Debt Service Reserve Fund Requirement.

(b) Simultaneously, City's Comptroller shall make a written request for inclusion in City's budget of the amount necessary to implement a loan to RACM to increase the balance in the Debt Service Reserve Fund to an amount not less than the Debt Service Reserve Fund Requirement. Such request shall be in writing and shall be submitted to the Mayor for inclusion in the Mayor's proposed executive budget and the Finance Committee of the Common Council, as appropriate, with a copy to City's Budget Director. In the event that the request submitted pursuant to paragraph 2(a) is approved by the Mayor and Common Council, any such request shall be reduced to the extent of any actual allocation of contingent funding and the implementation of the loan provided for in the preceding paragraph.

3. Loan to RACM; Repayment. In the event City allocates or appropriates moneys to fund a deficiency in the Debt Service Reserve Fund, City shall loan such funds to RACM by depositing such amount with the Trustee. The loan to RACM shall be repaid solely from funds provided by Borrower pursuant to the Financing Documents as defined in the Term Sheet at the interest rates set forth therein. RACM agrees that any payments made by Borrower under the Loan Agreement for the 2010 Bonds in excess of those necessary to fund current debt service on the Bonds and to maintain the balance in the Debt Service Reserve Fund at the Debt Service Reserve Fund Requirement shall be paid by the Trustee to the City as a repayment of such loan. RACM has no obligation to repay such loan from any other funds or source. Any principal payment by Borrower to City under the Reimbursement Agreement between the City and Borrower shall be deemed to be a repayment of the loan made by City to RACM.

4. City's Obligation Not Affected by Disputes With the Borrower. The obligations of City hereunder are not affected by any dispute which may exist between City, or any agency, board, commission, authority or other instrumentality of City, and Festival or Borrower under the Lease, the Reimbursement Agreement or otherwise. The obligations of City hereunder shall not be affected by the termination of the Lease or any determination that the Lease, the Reimbursement Agreement or any related documents is invalid or unenforceable in whole or in part.

5. Term. The obligations of City hereunder shall remain in full force and effect until the payment in full of the 2010 Bonds.

6. Remedies of RACM. In the event that City fails to fulfill its obligations hereunder RACM may pursue any remedy available in law or at equity under the laws of the State of Wisconsin; provided, however, that RACM and the City acknowledge and agree that the

failure of City's budget to contain an appropriation to fund a deficiency in the Debt Service Reserve Fund shall not entitle RACM to institute any action or proceeding against City.

7. Entire Agreement; Amendment. This Cooperation Agreement is the entire agreement between City and RACM with respect to the agreements set forth herein and supercedes any prior written or oral communication, understanding or agreement. This Agreement may be amended only by a written instrument signed by duly authorized representatives of City and RACM and, to the extent required under the Indenture, the consent of the owners of the 2010 Bonds.

8. Third-Party Beneficiaries. The owners of the 2010 Bonds (including the owners of Beneficial Interests (as defined in the Indenture) of the Bonds) are third party beneficiaries of this Cooperation Agreement and may, individually (to the extent permitted by the Indenture) or through the Trustee, institute any action at law or in equity permitted under the laws of the State of Wisconsin to enforce the rights and obligations of RACM and City hereunder. The parties acknowledge that RACM has assigned its rights under this Cooperation Agreement to the Trustee pursuant to the terms of the Indenture.

9. Governing Law. This Cooperation Agreement shall be governed by the internal laws of the State of Wisconsin.

CITY OF MILWAUKE

By: _____
Tom Barrett, Mayor

By: _____
Ronald D. Leonhardt, City Clerk

Countersigned:

By: _____
W. Martin Morics, Comptroller

REDEVELOPMENT AUTHORITY OF THE CITY OF MILWAUKEE

By: _____
Lois A. Smith, Chair

By: _____
David P. Misky
Assistant Executive Director

1089-2010-2683:163300

FINANCING TERM SHEET

REDEVELOPMENT AUTHORITY OF THE CITY OF MILWAUKEE
REDEVELOPMENT REVENUE BONDS

MILWAUKEE WORLD FESTIVAL, INC.
SOUTH END PROJECT

PURPOSE:

To provide up to $25 million in Redevelopment Authority of the City of Milwaukee (RACM) Development Revenue Bond (Bonds) proceeds to finance the South End Project (Project) to be constructed at the Henry Maier Festival Grounds during the period 2010 through 2012 (2010-11 and 2011-12 off-seasons) and to refund or otherwise retire RACM's 2001 bond issue.

ISSUER:

The Redevelopment Authority of the City of Milwaukee (RACM).

BORROWER:

Milwaukee World Festival, Inc. (FESTIVAL) or one or more new special purpose organizations created for purposes of structuring the financing.

CREDIT ENHANCEMENT:

The City of Milwaukee (CITY) will provide a "Moral Obligation Pledge", pursuant to the terms of a Cooperation Agreement with RACM, to pay debt service on the Bonds. This pledge will be structured consistent with CITY's budget process, including a timetable for appropriation by CITY's Common Council, the reporting of events of default, and legislative action by CITY's Common Council.

This will be substantially the same structure used for RACM's $18,545,000 Redevelopment Revenue Bonds, Series 2001 (Summerfest Project) issued in 2001 to finance FESTIVAL's Millennium Momentum Plan Capital Improvements I Project (2001 Bonds). This transaction will also utilize substantially similar documentation to the Transaction Documents (as defined in the Lease) for the 2001 Bonds, with such revisions as may be necessary to accommodate the New Markets Tax Credits structure described below. The final form of such documentation shall be subject to the approval of the CITY's comptroller and RACM's executive director.

FESTIVAL will pay to CITY a fee for credit enhancement equal to 50 basis points per annum of the New Money Portion of the Outstanding Bonds. The New Money Portion of the Outstanding Bonds means an amount equal to the principal amount of the Bonds outstanding at the time of computation multiplied by a fraction, the numerator of which is the original amount of Bond proceeds less the required debt service reserve fund for the Bonds and less the amount of 2001 Bonds to be retired, and the denominator of which is the original aggregate principal amount of the Bonds.

As a condition to the financing, FESTIVAL will be required to defease the 2001 Bonds, thereby releasing CITY from its Moral Obligation Pledge with respect to the 2001 Bonds.

AMOUNT:

The Bonds are to be issued in a principal amount not to exceed $25,000,000 for the combination of retiring the 2001 Bonds and financing construction of the Project. This amount may include issuance costs associated with the Bonds and administrative costs incurred by RACM and CITY, and required reserves. Neither RACM nor CITY shall be liable for Project costs exceeding the net amount available from Bond proceeds.

TERM & AMORTIZATION:

Not to Exceed 20 Years without CITY approval; level debt service, semi-annual interest payments and annual principal payments. To accommodate a New Markets Tax Credit financing, there may be an initial period during which no principal is paid.

RATE:

Equal to the true interest cost rate on the Bonds (plus a one-time RACM Bond administration fee calculated as 75 basis points on the principal balance of the Bonds).

FESTIVAL COMMITMENTS:

Timetable:

FESTIVAL shall commit to complete the Project not later than June 30, 2013. Capital Improvements comprising the Project, and the budget, are subject to approval by CITY.

Required Reserves:

FESTIVAL shall be required to maintain an operating reserve of cash and investment securities at all times equal to at least $2,500,000. FESTIVAL shall be entitled to maintain control and investment direction over such reserve in such a manner that such reserves are not “pledged funds” under section 1.148-1(c)(3) of the Income Tax Regulations.

Such portion of FESTIVAL's funds (which may be proceeds of the Bonds) as may be required to market the Bonds shall be deposited in a Reserve Fund held by the Trustee to draw upon in the event of a failure of FESTIVAL to pay debt service on the Bonds.

Disbursement of Bond Proceeds:

Disbursement of Bond proceeds will occur pursuant to a Disbursement Agreement or one or more other agreements mutually acceptable to RACM, CITY, FESTIVAL, and the trustee for the Bonds. CITY shall approve, in writing, all disbursements based on its review of invoices, site inspections and the overall completion status of the Project. The cost of administering this loan disbursement and the CITY review process will be borne by FESTIVAL.

Should the conduct of the Project or subsequent operations of FESTIVAL require any rebate of arbitrage or interest on Bond proceeds, or penalties as the result of violations of any IRS rules related to the tax exempt status of the Bonds, FESTIVAL shall be responsible for all required rebates and penalties.

Bond proceeds not disbursed on a timely basis, as defined in a Reimbursement Agreement or the Bond documents, shall be applied to call Bonds.

Financial Records & Reports:

FESTIVAL shall agree to maintain records of its construction and financial operations in a professional, timely and accurate manner. FESTIVAL further shall agree to provide CITY with specified financial reports and reasonable access to its construction, financial and operating records including an Audited Annual Financial Report on the results of operations, and fiscal year-end financial position. The costs of preparing the Annual Financial Report shall be paid by FESTIVAL. The Annual Financial Report shall include an audit opinion by an independent Certified Public Accounting firm and be submitted within 120 days following the end of the FESTIVAL fiscal year. The Annual Financial Reports shall include Management letters and other reports prepared by the independent auditors. CITY shall have the right, upon reasonable notice, to conduct its own financial audit of FESTIVAL, at CITY's sole expense.

Maintenance of Insurance:

During the term of the Bonds, FESTIVAL shall agree to maintain adequate builder's risk, property and casualty, general liability and workers' compensation and other insurance consistent with the requirements of paragraph 23 of the Lease.

Security Interest:

In consideration of the issuance of the Bonds and CITY's credit enhancement of the Bonds, FESTIVAL shall grant a general security interest in its all of its assets (subject to the following sentence) to secure either its reimbursement obligation to the City or its

obligations under the New Markets Tax Credits structure described below. The security agreement shall not require FESTIVAL to transfer possession of or control over any of its assets to the Trustee, CITY or any third party, or to pledge investment assets that would thereby become subject to yield restriction to maintain the tax exempt status of the Bonds under the Internal Revenue Code, nor shall it limit FESTIVAL's use of its assets in its business operations so long as there is no default on the Bonds.

Negative Covenants:

The Financing Documents shall include mutually acceptable covenants, generally consistent with the covenants set forth in the Reimbursement Agreement executed in conjunction with the 2001 Bonds:

1) Limitations on Indebtedness

2) Limitations on Liens and Encumbrances

3) Limitations on the Discount, Sale or Lease of FESTIVAL Assets

PROFESSIONAL SERVICES:

The financing team for the transaction, including bond counsel, the trustee, the lead underwriter and counsel for the transaction participants, will be substantially the same as for the 2001 Bonds, and is currently as set forth in Exhibit C attached hereto.

NEW MARKETS TAX CREDIT STRUCTURE:

To accommodate a New Markets Tax Credit (NMTC) financing, the financing may include one or more of the following elements; provided that FESTIVAL will remain the primary source of credit for the Bonds and will remain responsible (directly or as guarantor) for the Lease rentals:

- a newly-created property holding company (support organization for FESTIVAL) to be assigned FESTIVAL's leasehold rights under the Lease.
- a newly-created limited liability company that would borrow the Bond proceeds from RACM and indirectly make the proceeds available to FESTIVAL.
- a newly-credited foundation (support organization for FESTIVAL) to which FESTIVAL would transfer a portion of its reserves.

Possible alternative structures for the NMTC/Bond financing are shown as Exhibits A and B. Under the structure shown as Exhibit B, FESTIVAL would grant the security interest in its assets to the entity that lends it the bond proceeds.

EXHIBIT "A"

(Summerfest NMTC Bond Financing)

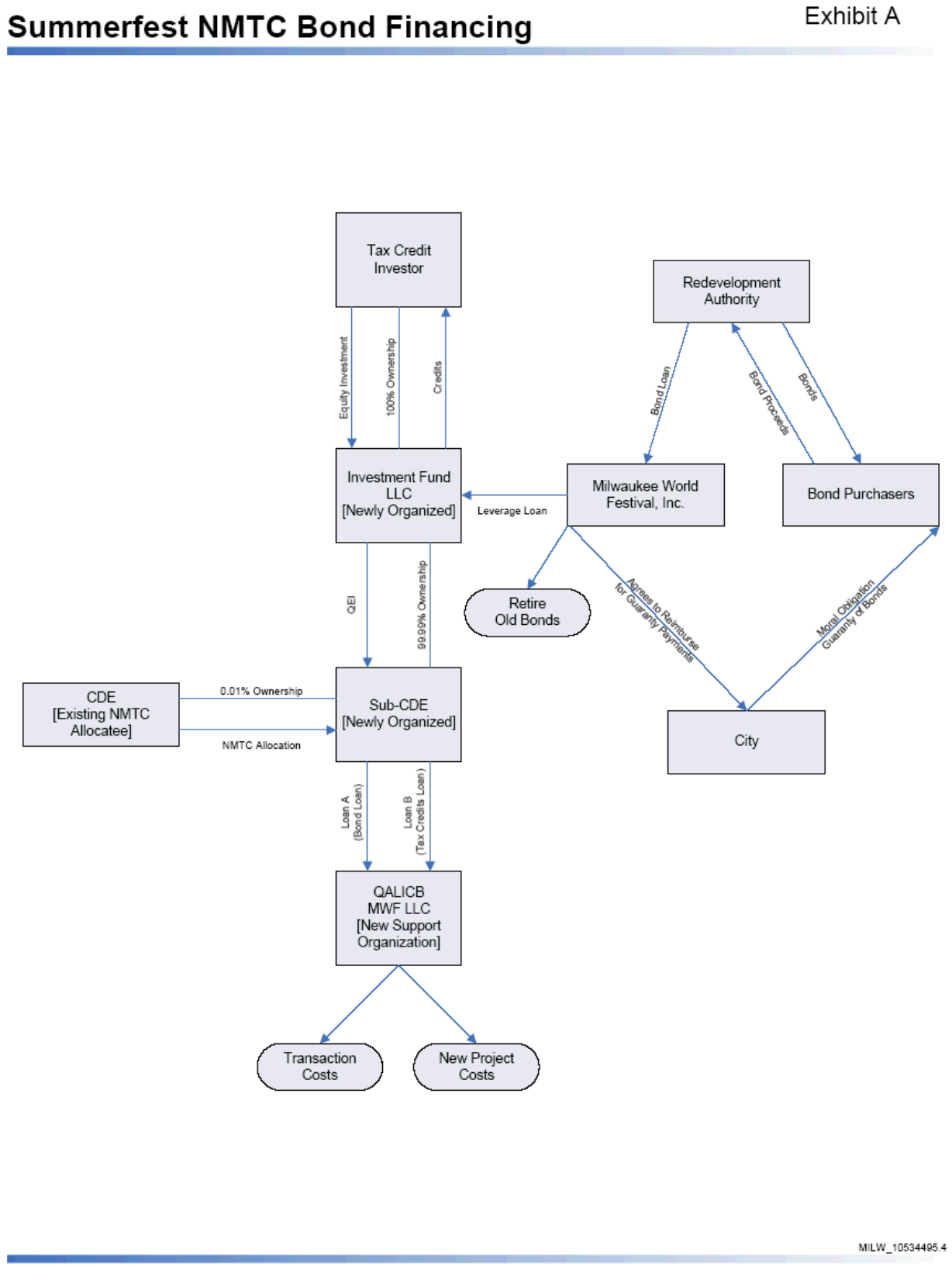

EXHIBIT "B"
(Summerfest NMTC Bond Financing)

Summerfest NMTC Bond Financing

Exhibit B

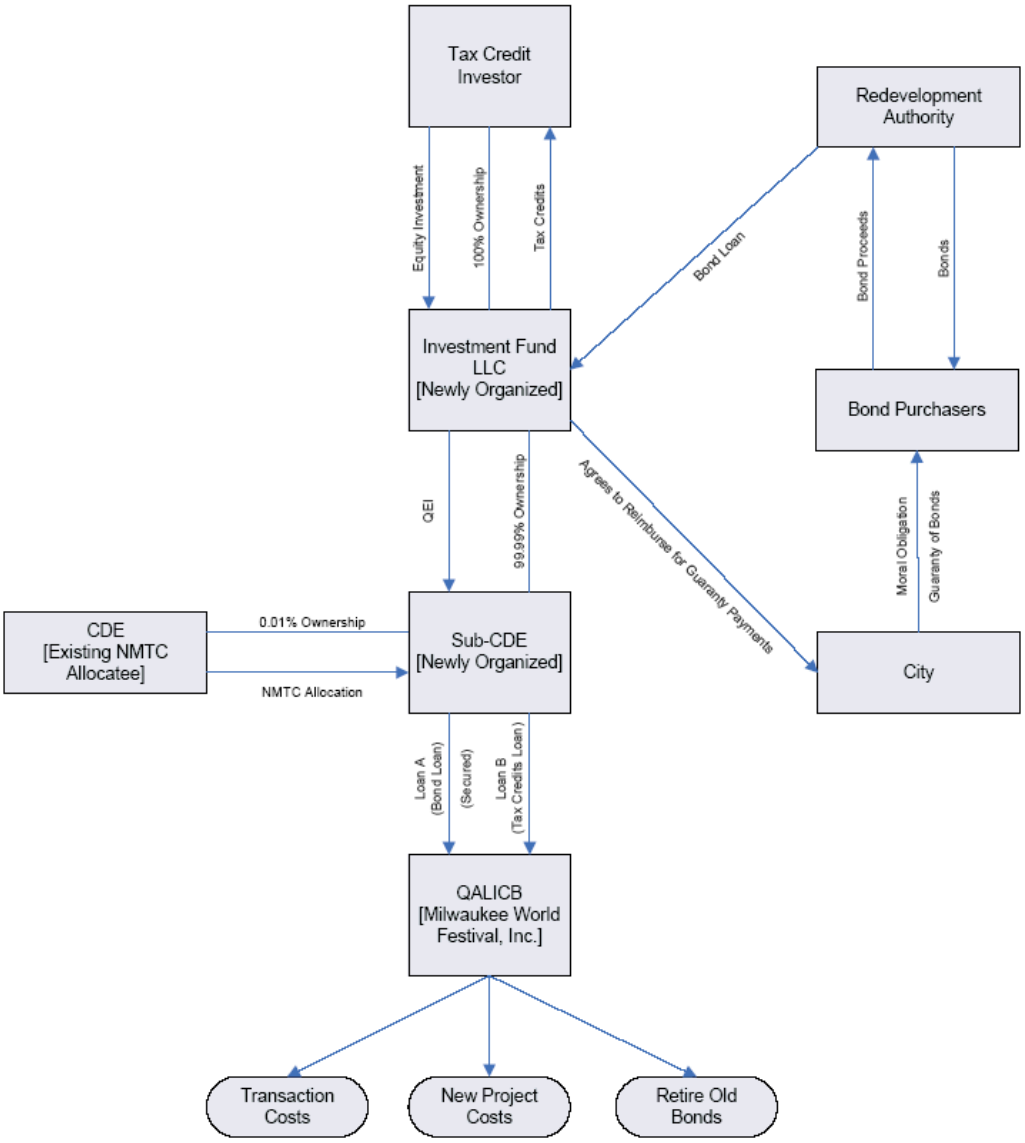

MILW_10534495.2

MILW_10577373.7

EXHIBIT "C"

(Working Group List)

REDEVELOPMENT AUTHORITY OF THE CITY OF MILWAUKEE
SUMMERFEST PROJECT

WORKING GROUP LIST
as of November 5, 2010

ISSUER

REDEVELOPMENT AUTHORITY OF THE CITY OF MILWAUKEE
Department of City Development
809 N. Broadway, 2nd Floor
Milwaukee, WI 53202
Fax: (414) 286-5778

Mr. James S. Scherer, Economic Development Officer
Phone: (414) 286-5850
Email: jscher@mkedcd.org

CITY OF MILWAUKEE

Room 800 - City Hall
200 E. Wells Street
Milwaukee, WI 53202

Mr. Thomas O. Gartner, Assistant City Attorney
Phone: (414) 286-2601
Fax: (414) 286-8550
Email: tgartn@milwaukee.gov

BOND TRUSTEE

U.S. BANK NATIONAL ASSOCIATION
CORPORATE TRUST SERVICES
1555 N. RiverCenter Drive, Suite 203
Milwaukee, WI 53212
Fax: (414) 905-5049

Ms. Yvonne Siira, Vice President
Phone: (414) 905-5010
Email: yvonne.siira@usbank.com

BOND COUNSEL

REINHART, BOERNER, VAN DEUREN, S.C.
1000 N. Water Street
Milwaukee, WI 53202
Fax: (414) 298-8097

Mr. William F. Flynn
Phone: (414) 298-8128
Email: wflynn@reinhartlaw.com

Mr. Dave Schulz
Phone: (414) 298-8326
Email: dschulz@reinhartlaw.com

BORROWER

MILWAUKEE WORLD FESTIVAL, INC.
SUMMERFEST
200 N. Harbor Drive
Milwaukee, WI 53202

Ms. Susan Landry, CPA, Controller
Phone: (414) 287-4412
Fax: (414) 287-4495
Email: slandry@summerfest.com

Mr. Frank Nicotera, CAO/General Counsel
Phone: (414) 287-4521
Fax: (414) 270-6704
Email: fnicotera@summerfest.com

CO-BOND COUNSEL

GONZALEZ, SAGGIO & HARLAN, LLP
225 East Michigan, 4th Floor
Milwaukee, WI 53202
Fax: (414) 277-8521

Ms. Jennifer Pflug Murphy
Phone: (414) 277-8500
Email: jennifer_pflugmurphy@gshllp.com

REDEVELOPMENT AUTHORITY OF THE CITY OF MILWAUKEE
SUMMERFEST PROJECT

BORROWER'S COUNSEL

FOLEY & LARDNER, LLP
777 East Wisconsin Avenue
Milwaukee, WI 53202-5367
Fax: (414) 297-4900

Mr. David B. Ryan
Phone: (414) 297-5761
Email: dryan@foleylaw.com

CO-MANAGER

TBD

UNDERWRITER'S COUNSEL

DAVIS & KUELTHAU, S.C.
111 East Kilbourn Avenue, Suite 1400
Milwaukee, WI 53202

Mr. Bradley D. Page
Phone: (414) 225-1424
Fax: (414) 278-3624
Email: bdp@dkattorneys.com

Ms. Cyndi G. Fletcher
Phone: (414) 225-1415
Fax: (414) 278-3615
Email: cfletcher@dkattorneys.com

SENIOR MANAGER

ROBERT W. BAIRD & CO.
777 East Wisconsin Avenue, 17th Floor
Milwaukee, WI 53202
Fax: (414) 298-7354

Mr. John A. Mehan, Managing Director
Phone: (414) 765-3719
Email: jmehan@rwbaird.com

Ms. Amy Young, First Vice President
227 W. Monroe St., 19th Floor
Chicago IL, 60606
Phone: (312) 609-4484 (Chicago)
Phone: (414) 765-7274 (Milwaukee)
Email: ayoung@rwbaird.com

Email Addresses:
jscher@mkedcd.org;
slandry@summerfest.com;
fnicotera@summerfest.com;
dryan@foleylaw.com;
tgartn@milwaukee.gov;
wflynn@reinhartlaw.com;
dschulz@reinhartlaw.com;
jennifer_pflugmurphy@gshllp.com;
bdp@dkattorneys.com;
cfletcher@dkattorneys.com;
jmehan@rwbaird.com;
ayoung@rwbaird.com;
yvonne.siira@usbank.com;

City of Milwaukee

Department of City Development

City Plan Commission
Neighborhood Improvement
Development Corporation
Redevelopment Authority

Rocky Marcoux
Commissioner

Martha L. Brown
Deputy Commissioner

October 4, 2010

To The Honorable
Common Council of the City of Milwaukee
Milwaukee, WI 53202

Dear Members of the Common Council:

The Department of City Development respectfully requests introduction of the attached title only resolution relative to the City's moral obligation to support the payment of bonds issued by the Redevelopment Authority of the City of Milwaukee on behalf of Summerfest. This file has no fiscal impact.

Your consideration of this request is appreciated.

Sincerely,

Rocky Marcoux
Commissioner

Attachment

c: Ald. Hines, President, Common Council
Ald. Bauman, 4th Aldermanic District
Standing Committee Chair

809 North Broadway, Milwaukee, WI 53202-3617 (414) 286-5800
www.mkedcd.org (Department of City Development)
www.choosemilwaukee.com (Milwaukee Business Information)

NOTICES SENT TO FOR FILE 100737:

NAME	ADDRESS	DATE NOTICE SENT		
Rocky Marcoux	DCD	11/9/10		

City of Milwaukee

200 E. Wells Street
Milwaukee, Wisconsin 53202

Legislation Details (With Text)

File #:	100639 **Version:** 1		
Type:	Ordinance	**Status:**	In Committee
File created:	9/21/2010	**In control:**	ZONING, NEIGHBORHOODS & DEVELOPMENT COMMITTEE
On agenda:		**Final action:**	
Effective date:			
Title:	A substitute ordinance relating to registration of vacant buildings.		
Sponsors:	ALD. HINES JR.		
Indexes:	BUILDING CODE		
Attachments:	Hearing Notice List		

Date	Ver.	Action By	Action	Result	Tally
9/21/2010	0	COMMON COUNCIL	ASSIGNED TO		
9/28/2010	0	ZONING, NEIGHBORHOODS & DEVELOPMENT COMMITTEE	HEARING NOTICES SENT		
9/28/2010	0	ZONING, NEIGHBORHOODS & DEVELOPMENT COMMITTEE	HEARING NOTICES SENT		
10/5/2010	0	ZONING, NEIGHBORHOODS & DEVELOPMENT COMMITTEE	HELD IN COMMITTEE	Pass	5:0
11/12/2010	1	ZONING, NEIGHBORHOODS & DEVELOPMENT COMMITTEE	HEARING NOTICES SENT		

powered by Legistar™

Number
100639
Version
SUBSTITUTE 1
Reference
090376
Sponsor
ALD. HINES
Title
A substitute ordinance relating to registration of vacant buildings.
Sections

80-10-1	am
80-10-2-b-33	cr
80-10-3-a	am
80-10-3.5	cr
80-10-8	am
200-51.7-9	rc

Analysis
This ordinance amends the city's chronic nuisance premises provisions by adding to the definition of nuisance activity failure to register, secure or maintain vacant buildings. This ordinance also amends the vacant building registration program to provide a penalty for failure to register within 30 days after the building becomes vacant or within 30 days after assuming ownership, whichever is later, in an amount not less than $500 nor more than $2,000, and in default of payment, imprisonment not less than 20 days nor more than 80 days. A penalty is also provided for failure to secure or maintain the premises in an amount not less than $350 nor more than $1,500, and, in default of payment, imprisonment not less than 14 days nor more than 60 days.

...Body
The Mayor and Common Council of the City of Milwaukee do ordain as follows:

Part 1. Section 80-10-1 of the code is amended to read:

80-10. Chronic Nuisance Premises.

1. FINDINGS. The common council finds that any premises that has generated 3 or more calls for police service for nuisance activities has received more than the level of general and adequate police service and has placed an undue and inappropriate burden on the taxpayers of the city. The common council further finds that premises owners, and other parties conducting business activities upon the premises, that chronically fail to control the use of their property substantially interfere with the comfortable enjoyment of life, health and safety of the community. >>The common council further finds that vacant buildings become havens for vandalism, arson and drug crimes, substantially interfering with the comfortable enjoyment of life, health and safety of the community. <<The common council therefore directs the chief of police and the commissioner of neighborhood services, as provided in this section, to charge the owners of such premises the costs associated with abating the violations at premises at which nuisance activities chronically occur.

Part 2. Section 80-10-2-b-33 of the code is created to read:

2. DEFINITIONS.
b.
b-33. Failure to register, secure or maintain vacant buildings, as provided in s. 200-51.7.

Part 3. Section 80-10-3-a of the code is amended to read:

3. PROCEDURE.
a. >>Except as provided in sub. 3.5, << [[~~Whenever~~]]>>whenever << the chief of police determines that the police department has responded to 3 or more nuisance activities that have occurred at a premises on separate days during a 30-day period or that the police department has responded to 2 or more nuisances of the types defined in sub. 2-b-5, 9 to 12 that have occurred at a premises within one year, the chief of police may notify the premises owner or other responsible party in writing that the premises is a nuisance. This notice shall contain:

Part 4. Section 80-10-3.5 of the code is created to read:

3.5. PROCEDURE FOR VACANT BUILDINGS.
a. Whenever the commissioner of neighborhood services determines that a vacant building has not been registered, secured or maintained, as provided in s. 200-51.7, the commissioner of neighborhood services may notify the premises owner or other responsible party in writing that the premises is a nuisance. This notice shall contain:
a-1. The street address or legal description sufficient for identification of the premises.
a-2. A description of the violations to s. 200-51.7 that have occurred at the premises.
a-3. A statement indicating that the cost of future police and fire enforcement may be assessed as a special charge against the premises and that the owner or other responsible party may be cited under sub. 6.
a-4. A statement that the premises owner or other responsible party shall within 10 days register, secure and maintain the building as provided in s. 200-51.7 or file an appeal pursuant to sub. 5-a.
b. Notice shall be deemed to be properly delivered if sent either by first class mail to the premises owner's or other responsible party's last known address, or if delivered in person, to the premises owner or other responsible party. If the premises owner or other responsible party cannot be located, the notice shall be deemed to be properly delivered if a copy of it is left at the premises owner's or other responsible party's usual place of abode or regular business in the presence of some competent member of the family at least 14 years of age or a competent adult currently residing or conducting business there and who shall be informed of the contents of the notice.
If a current address cannot be located, it shall be deemed sufficient if a copy of the notice is sent by first class mail to the last known address of the owner or other responsible party as identified by the records of the commissioner of assessments, to the appropriate licensing authority or the commissioner of neighborhood services.
c. Upon receipt of the nuisance premises notice, the premises owner or other responsible party shall register, secure and maintain the building as provided in s. 200-51.7. If the premises owner or other responsible party fails to comply with s. 200-51.7, the commissioner of neighborhood services shall notify the premises owner or other responsible party that the cost of future enforcement may be assessed as a special charge against the premises and that the owner or other responsible party may be cited under sub. 6.

d. The chief of police and the chief of fire may calculate the cost of services and refer the cost to the commissioner of neighborhood services for subsequent nuisance activities occurring at the premises provided such nuisance activity occurs under one of the following circumstances:
d-1. 13 days after notice was given pursuant to sub. 3.5-a if the premises owner or other responsible party fails to either register, secure and maintain the building as provided in s. 200-51.7 or file an appeal pursuant to sub. 5-a.
d-2. After the administrative review appeals board affirms the nuisance premises determination as provided in s. 320-11 if an appeal is timely filed pursuant to sub. 5-a.
e. The commissioner of neighborhood services shall notify the premises owner or other responsible party of the decision to refer the cost of police and fire services by copy of the police or fire chief's cost referral letter to the commissioner of neighborhood services or, alternatively, the chief of police or fire shall notify the responsible party of the decision to refer the cost of services by copy of the chief's referral letter to the city attorney for collection and to the appropriate licensing authority. Delivery of this notice shall be made as set forth in par. b. The cost referral letter shall contain:
e-1. The street address or legal description sufficient for identification of the premises.
e-2. A statement that the chief of police or chief of fire has referred the cost of enforcement to the commissioner or to the city attorney and to the appropriate licensing authority, with a concise description of the nuisance activities and the relevant sections of the code.
e-3. A notice of the premises owner's or other responsible party's right to appeal pursuant to sub. 5.

Part 5. Section 80-10-8 of the code is amended to read:

8. SUBSEQUENT NOTICE OF NUISANCE ACTIVITY. Nothing in this section shall prevent or prohibit >>either the commissioner of neighborhood services or<< the chief of police from issuing or reissuing a notice under sub. 3-a >>or sub. 3.5-a << regarding subsequent nuisance activity at a premises.

Part 6. Section 200-51.7-9 of the code is repealed and recreated to read:

200-51.7. Vacant Building Registration.

9. PENALTY.
a. Failure to Register. Any property owner or entity functioning as a trustee of an owner that fails to register a vacant building as required under sub. 3 shall, upon conviction, forfeit not less than $500 nor more than $2,000, together with the cost of the action, and in default of payment thereof may be imprisoned in the house of correction or county jail of Milwaukee county not less than 20 days nor more than 80 days.
b. Failure to Secure and Maintain. Any property owner, or entity functioning as a trustee of an owner, having a duty to register a vacant building that fails its duty to secure and maintain the property as required under subs. 5 and 6 shall, upon conviction, forfeit not less than $350 nor more than $1,500, together with the cost of the action, and in default of payment thereof may be imprisoned in the house of correction or county jail of Milwaukee county not less than 14 days nor more than 60 days.

LRB
APPROVED AS TO FORM

_____
Legislative Reference Bureau
Date: _____
Attorney
IT IS OUR OPINION THAT THE ORDINANCE
IS LEGAL AND ENFORCEABLE

_____
Office of the City Attorney
Date: _____

Drafter
LRB120872-2
RTW
10/19/10

NOTICES SENT TO FOR FILE 100639:

NAME	ADDRESS	DATE NOTICE SENT		
All Council members		9/28/10	11/12/10	
Art Dahlberg	DNS	x	x	
Ron Roberts	DNS	x	x	
Richard Watt		x	x	
Joel Plant	MPD	x	x	
Jay Unora	CA	x	x	
Ted Medhin	LRB	x	x	
Kim Montgomery	Mayor's Office	x	x	
Chief Flynn	MPD	x	x	